SERVICE MANUAL

SAAB SONETT II

Ordering No. 787961

Supplement to Service Manual for Saab 95, 96 and Sport.

SAAB AKTIEBOLAG
LINKÖPING - TROLLHÄTTAN • SWEDEN
Enbart för spridning utomlands

Foreword

This Service Manual for Saab Sonett II deals with the sections where the car differs from the Saab 95, 96 and Monte Carlo 850. Thus the book is a supplement meant to be used together with the Service Manual for the Saab 95, 96 and Monte Carlo 850. (the two-stroke version)

SAAB AKTIEBOLAG

Trollhättan, Sweden

Lay-out and editing:
Publication Dept., SAAB
TROLLHÄTTAN

Chassis and engine numbers

To ensure correct identification in the case of a particular car or engine, the chassis and engine numbers, together with the mileage, must always be quated in warranty claims, etc. If a replacement engine is fitted in a car, the number of the original engine must, without fail, be stamped in the appropriate place. This is of the utmost importance if customs difficulties are to be avoided in the event that the car is subsequently used in a country other than that of registration.

General tightening torques

Normal tightening torques for standard bolts and nuts. For special nuts and bolts see the technical data for the appropriate section.

Size	Wrench torque		
	kpm	in,-lb,	ft.-lb.
1/4"	0.7- 1.0	61-87	5-7
5/16"	1.5- 2.5	130-220	10-18
3/8"	2.5- 4.0	220-350	18-28
7/16"	4.0- 7.0	350-600	28-50
1/2"	7.0-10.0	600-850	50-72
9/16"	10.0-14.0	850-1200	72-100
5/8"	14.0-20.0	1200-1700	100-145

General data

Overall length, including bumpers ...	12 ft. 4 in. (3770 mm)
Overall width	4 ft. 11 in. (1500 mm)
Overall height with driver	3 ft. 10 in. (1160 mm)
Ground clearance at curb weight	5 in. (125 mm)
Track, front and rear	4 ft (1220 mm)
Wheelbase	7 ft. 1 in. (2149 mm)
Turning circle diameter	31 ft. 6 in. (9.6 metres)
Curb weight, incl. fuel, water, tools and spare wheel.....	1.630 lbs (740 kg)
Weight distribution: Fully laden	front 60%

ENGINE

General Data

Cubic capacity	51.9 cu. in. (841 c.c.)
Brake horsepower, DIN	60 at 5200 r.p.m.
Torque, DIN	69.4 ft-lb (9.6 kpm) at 4000 r.p.m.
Bore	2.76 in. (70 mm)
Stroke	2.87 in. (73 mm)
Compression ratio	9:1
Order of firing (cylinder 1 at rear)	1-2-3

DIMENSIONS AND TOLERANCES in millimetres

Bore, standard:	
Class A	69.987-69.994
Class AB	69.994-70.001
Class B	70.001-70.008
Class C	70.036-70.046
Bore, oversizes (ÖD*)	
Öd 0.5 A	70.501-70.508
B	70.508-70.515
Öd 1.0 A	71.001-71.008
B.....	71.008-71.015
Piston diameter, standard:	
Class A	69.895-69.902
Class AB	69.902-69.909
Class B	69.909-69.916
Class C	69.944-69.951
Piston diameter, oversizes (ÖD*)	
Öd 0.5 A	70.409-70.416
B	70.416-70.423
Öd 1.0 A	70.909-70.916
B	70.916-70.923
Measuring the piston diameter ... Measure at an angle of 90° to piston pin Distance from lower edge of piston when measuring	0.6 in. (15 mm)
Piston clearance	0.085-0.099 mm
Max. permissible clearance between piston and cylinder, limit of wearing	0.0059 in. (0.15 mm)

* The letters ÖD are stamped into the oversize pistons, respectively into the cylinder block

	in.	millimetres
Out-of-round, piston:		
Difference in measurements at 90° to pin and in line with pin	0.03-0.04	0.08-0.10
Distance from lower edge of piston when measuring:	0.6 in. (15 mm)	
Width of piston rings, upper	2.478-2.490	
Width of piston ring, lower	1.978-1.990	
Piston-ring gap	0.01-0.02 in. (0.25-0.50 mm)	
Piston-ring clearance in groove:		
upper ring	0.0035-0.0043 in. (0.08-0.11 mm)	
center ring	0.0027-0.0040 in. (0.07-0.10 mm)	
lower ring	0.0024-0.0035 in. (0.06-0.09 mm)	
Diameter of piston pin	0.75 in. (18 mm)	
Axial clearance of connecting rod:		
a. at crankpin	0.807-0.913 in. (2.05-2.32 mm)	
b. at piston pin	0.004-0.016 in. (0.1 -0.4 mm)	
Radial clearance of connecting rod bearing	0.0004-0.0006 (0.010-0.016 mm)	
Radial clearance of piston pin bearing	Should fit with light thumb pressure. Pin easily rotable with 2 fingers	
Max. lateral throw of crankshaft	0.02 in. (0.05 mm)	
Compression in new engine (measured at an engine temp. of 175°F or 80°C with throttle wide open and full starter r.p.m.)	all cyl. 128 ± 7.1 p.s.i. (9.0 ± 0.5 kp/cm^2)	

WRENCH TORQUES

Unit	Bolts		Wrench torque		
	Quant.	Size	Kpm	in.-lb.	ft-lb.
Spark plugs	3	M 18	4.5	390	32
Cylinder head	12	7/16"	3[1)]	275[1)]	22[1)]
Crankcase halves	8	5/16"	2.5	220	18
	8	3/8"	4	340	29
Flywheel bolts	8	5/16"	3	275	22
Crankshaft pulley	1	1/2"	5	440	36

Note! Angle torqueing of cylinder head bolts.

1) After tightening to a torque of 3 kpm (= 275 in.-lb. or 22 ft-lb.), turn bolt through 90°. When the engine has warmed up, turn through a further 20°. After 1200 miles (2000 km) driving, a further 20°.

Fuel system

Fuel tank capacity, approx.	15.8 US gals (60 litres)
Fuel pumps	Bendix 480534

CARBURATOR SOLEX

Type:	40 DHW
Choke tube	33
Main jet, cyl. 1 and 3	122,5
Main jet, cyl. 2	130
Emulsion jet	240
By-pass fuel jet	65
By-pass air jet	100
Idling fuel jet (only carburator, cyl. 2)	45
Idling air jet (only carburator, cyl. 2)	100
Float, return fuel chamber	7.3 g
Float value, return fuel chamber ..	2.0 g

Exhaust system

GENERAL DATA

Inside diameter of exhaust pipe ...	1.34 in. (34 mm)

Cooling system

SPECIFICATION

Capacity of cooling system:	
Incl. heater system	1.72 U.S. gal. (6.5 liters)
Thermostat opening temperature	180°F (82°C)
Radiator pressure cap opens at	3.4-4.25 p.s.i. (0.25-0.30 kp/cm^2)

TABLES

The freezing point in the table below is the temperature at which ice crystals begin to form in the cooling system. The use of alcohol as anti-freeze is not recommended, since it evaporates at relatively low temperatures. Both glycol and alcohol are injurious to paintwork and must therefore be handled with care.

AMOUNT OF GLYCOL IN THE COOLING AND HEATING SYSTEM

U.S. quarts (liters) of glycol in the system	Approx. percentage by volume	Freezing point °C	Freezing point °F	Boiling point °C	Boiling point °F	Specific gravity
1	15	-7	19	101	214	1.020
2	31	-18	± 0	102	216	1.035
3	46	-33	-27	105	221	1.053

ELECTRICAL SYSTEM

BATTERY

Voltage	12 V
Capacity	44 Ah

GENERATOR, BOSCH

Gear ratio generator - engine	1.68:1
Type	K1 - 14V 35A 20
Rated voltage	12 V
Max. permissible continuous load	35 A
Direction of rotation	Clockwise and counter-clockwise

CHARGING REGULATOR, BOSCH

Type designation	BOSCH ADN 1 14V
Cut-in voltage	12.4-13.1 V
Voltage setting when idling	13.5-14.5 V
Voltage setting whit a load of 25 A ..	13.3 - 14.3 V
Reverse current relay breaks at	2-7.5 A
Max. output of warm regulator	300 W
Max. output of cold regulator (2-3 min. after starting).....	420 W

STARTER MOTOR, BOSCH

Type designation	AL/EDD 0.5/12 R 4
No. of teeth on pinion	9
No. of teeth on ring gear	97
Brush-spring pressure	800-900 grammes (19-25 oz.)

DISTRIBUTOR, BOSCH

Type designation	JF3(R)
Capacitor	LMKO 1 Z 30
Ignition setting:	
Basic setting	10° B.T.D.C.
At 3000 r.p.m.	20° B.T.D.C.
Order of firing (cyl. 1 at rear)	1-2-3
Breaker gap	0.35-0.45 mm (0.014-0.018 in.)
Dwell angle	75 -82°
Contact pressure	400-530 grammes (14-19 oz.)
Direction of rotation	Clockwise
Axial play, distr. shaft	(0.1-0.2 mm) 0.004-0.008 in.

IGNITION COIL, BOSCH

Type designation	KW 12V
Series resistance	Vitrom

SPARK PLUGS

Type of spark plug	Side electrode
Electrode gap with resistance ignition cable (starting electrode)	Bosch MGV 260 T31S 0.022-0.024 in. (0.55-0.60 mm)
Thread	0.75 in. (18 mm)
Tightening torque	32 ft.-lb. (4.5 kpm)

BULBS	NUMBER	PHILIPS NO.	WATTS
Headlights, Sealed. Beam	2		
Parking lights, front	2	12819	6W
Flasher, front	2	1073	25W
Stop lights and flashers, rear .	4	1073	25W
Tail lights	2	12821	5W
Number-plate lights	2	12844	5W
Map reading light	1	12844	5W
Temperature and fuel gauges, speedometer and control lights .	9	12829	2W
Other instrument lights	2	12913	2W
Back-up lights	2	1034	32 Cp
Lighting, clock	1	12929	4W
Fuses	12	-	8 amps.

FLASHER UNIT

Type designation:	
Lucas	FL5 12V 42 W
Hella	91 PSt 2x32 Cp 12 V

HORN HELLA

Type designation	B 32/5 - 12 V

FUEL GAGE TANK UNIT

Type designation.	VDO 625

HEATER FAN MOTOR

Type designation, Electrolux	KS 3430/220 12 V
WINDSHIELD WIPER MOTOR	
Type designation Lucas	LUCAS DL 3 A
WINDSHIELD WASHER	Make Dahlberg

TRANSMISSION

CLUTCH

FICHTEL & SACHS CLUTCH

Clutch type	Single dry plate
Clearance between release plate and flywheel	1.02±0.02 in. (26±0.5 mm)
Pressure-plate springs:	
Length uncompressed	1.95 in. (49.5 mm)
Length compressed	1.16 in. (29.4 mm)
Tension when compressed	108-115 lbs. (49-52 kp)
Min permissible tension when compressed	100 lbs. (45 kp)
Inner springs	
Length uncompressed	1.95 in. (49.5 mm)
Lengt compressed	1.03 in. (26.2 mm)
Tension when compressed	35-40 lb. (16-18 kp)
Min. permissible tension when compressed	33 lb. (15 kp)
Dimensions of clutch facing	(180x125x3.5 mm)
New clutch disc:	
Thickness, unloaded	0.358-0.370 in. (9.1-9.4 mm)
" loaded with 770 lbs (350 kp)	0.327-0.343 in. (8.3-8.7 mm)
Max throw clutch disc	0.024 in. (0.6 mm)
Engagement pressure	860-926 lb. (390-420 kp)

Transmission Specifications

Oil capacity	approx. 1.4 U.S. quarts (1.4 liters)
Type of oil	SAE 80 EP

Gear ratios, total:	
1 st gear	17.0:1
2nd gear	10.2:1
3rd gear	6.3:1
4th gear	4.1:1
Reverse	15.5:1
Differential gear ratio, pinion: ring gear	4.88:1
No. of teeth, pinion: ring gear	8:39

Road speed in m.p.h. at 1000 r.p.m. engine speed:	
1st gear	4.2
2nd gear	6.9
3rd gear	11:1
4th gear	17.2
Reverse	4.5

Pinion/ring-gear adjustment: specified dimension ±0.002 in. (0.05 mm).
Ring-gear backlash: specified dimension ±0.002 in. (0.05 mm).

MATCHED GEAR SETS

4-speed transmission
3rd speed gear Pinion shaft 3rd gear
4th speed gear Pinion shaft 4th gear
Ring gear Pinion shaft
Synchromesh

TIGHTENING TORQUES

Application	Bolts		Tightening torques		
	Quant.	Size	kpm	in.-lb.	ft.-lb.
Transmission case end cover	6	5/16"	2,5	220	18
Differential bearings	4	3/8"	4	340	29
Ring gear bolts	12	5/16"	2.5	220	18
Pinion-shaft nut. First tightening	1	7/8"	12	1050	87
Then slacken and retighten			6	530	44
Nut, primary shaft	1	3/4"	5	425	36
Nut, countershaft	1	9/16"	8	700	60

BRAKE SYSTEM

General

Make	Lockhead
Type, front	Disc brake
Type, rear	One leading shoe
Footbrake	Hydraulic two-circuit type
Handbrake	Mechanical

DIMENSIONS, ETC.:

Brake disc, front	10 1/2" (266,70 mm)
Brake drum, rear	8" (203,2 mm)
Master cylinder	3/4"
Wheel cylinder, front	2"
Wheel cylinder, rear	5/8"
Brake shoes, rear	8" x 1 1/2"
Brake hoses, front, length of	8 1/2"

Brake hoses, rear, length of	$8^1/2$"
Other brake lines	3/16" Bundy tube
Clearance between master-cylinder piston and push-rod	0.024-0.047 in. (0.6-1.2 mm)
Same clearance at tip of brake pedal	0.12-0.24 in. (3-6 mm)
Brake fluid	Lockhead 328 Brake Fluid.

Adjustment machining of brake drums permitted to max. diameter:

Rear	8.059 in. (204.7 mm)
Max. total indicated radial brake-drum throw	0.006 in. (o.15 mm)
Max. total indicated axial brake drum-throw	0.08 in. (0.2 mm)
Centerless grinding of brake linings.	rear 0.020 -0.022 in. (0.50-0.56 mm)
Tightening torques:	less than the drum
Castle nut, front wheel hub	18 kpm, 1500 in-lb, 130 ft-lb.
Castle nut, rear wheel hub	9 kpm, 800 in-lb, 65 ft-lb.

Wheel alignment

Front wheel alignment, no load:	
"King-pin" inclination	$7^o \pm 1$
Caster	$2^o \pm 1/2$
Camber	$0^o \pm 1/4$
Toe-in at wheel rim	0.04 in. $\pm$ 0.04 (1 mm $\pm$ 1)
Turning angles:	
Outside wheels	20°
Inside wheels	$22 1/2^o \pm 1 1/2$

STEERING GEAR

Steering-gear adjustment:	
Pinion axial clearance	0.04-0.08 in. (0.1-0.2 mm)
Radial clearance of rack, ...	max. 0.012 in. (0.3 mm)
Steering, ratio, ...	14:1
Wheel travel between limit positions.	$2 1/4$ turns
Tie-rod ends	
Distance between wrench flat and retaining nut	Max 1.5 in. (40 mm)
Permissible difference between lefthand and righthand dimension ..	Max 0.08 in. (2 mm)

TIGHTENING TORQUE

Nut, tie-rod end: 3.5-5 kpm, 300-440 in-lb, 25-36 ft-lb.

FRONT COIL SPRING	
Max. spring expansion, front	5 1/2 in. (140 mm)
Front coil springs, length	13.3 in. (350 mm)
Front coil springs, No. of coils	8
Wire diameter	0.46 in. (11.7 mm)
REAR COIL SPRING	
Max. spring expansion	6 3/4 in. (170 mm)
Rear coil springs, length	11.8 in. (300 mm)
No. of coils	6 1/2
Wire diameter	0.4 in. (10 mm)
REAR WHEEL ALIGNMENT	
Camber	0° ± 1
Toe-in (toe-out):	0° ± 1
Both wheels together or Measured rim-to-rim	0 ±-0.28 in (7 mm)
Toe-in (toe-out) per wheel must not exceed	0° ± 3/4
Max. difference in wheelbase, left and right (front wheels pointing straight ahead)	0.6 in. (15 mm)
FRONT SHOCK ABSORBERS	
Type of shock absorber	Telescopic, hydraulic
Length of front shock absorber	9 3/4 in. (250 mm) Extended 14 1/2 in. (390 mm)
Front shock-absorber stroke, fitted .	3 1/4 in. (82 mm)
REAR SHOCK ABSORBERS	
Type of shock absorber	Telescopic, hydraulic
Length of rear shock absorber between centre hole and shoulder for washer	10" (255 mm)
Extended	16 7/16" (417 mm)
Stroke, shock absorbers	4 1/4 in. (106 mm)
WHEELS	
Type	"wide base"
Size	4J x 15"
Depth of drop center	1.77 in. (45 mm)
Permissible out-of-round of rim, see fig. A	0.06 in. (1.5 mm)
Permissible rim throw, see fig. B ...	0.06 in. (1.5 mm)

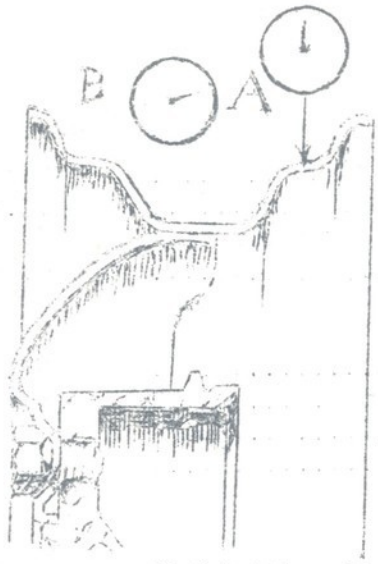

MEASURE POINTS ON THE RIM

TIRES

	Front	Rear
Tire pressure, dim. 155 x 15"	(21 p.s.i. (1.5 kp/cm^2)	20 p.s.i. (1.4 kp/cm^2)

Wheel bolts

Width across flats	3/4 in. (19.05 mm)
Thread	UNC 9/16"

Tightening torques

Castle nut, front wheel hub	18 kpm, 1500 in-lb, 130 ft-lb.
Castle nut, rear wheel hub	9.5 kpm, 850 in-lb, 70 ft-lb.
Wheel bolts	8-10 kpm, 670-850 in-lb, 58-72 ft-lb.

INSTRUMENTS

Speedometer drive ratio

Model	Ratio ring gear: pinion	Dynamic radius of road wheel in.	mm	Speedometer Rev. per kilometer covered	Rev. per mile covered
Sonett II	8:39	11.8	300	585	942

CONTENTS

Description

Engine

The engine in the Saab Sonett II corresponds to the engine in the Saab Monte Carlo 850.
See Service Manual for Saab 95, 96 and Monte Carlo 850.

It has, however, a different water outlet, which is equipped with a connection for a thermostatically controlled switch and a connection for a hose to the expansion tank.

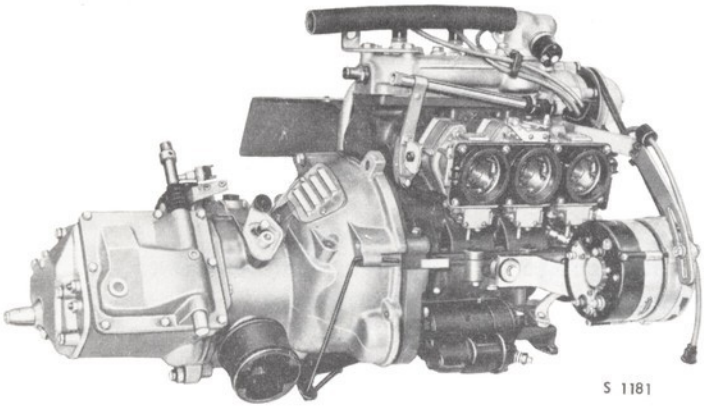

Power unit

Lubrication system

The oil tank in the Sonett II holds 3 US quarts (3 litres) and has no glass gauge. In other respects, the lubrication system is identical with that of Monte Carlo 850.

Fuel system

In the Sonett II the fuel tank is placed above the rear axle behind the cross sheet, which is the wall between the passenger compartment and the luggage compartment. The tank holds 16 US gallons (60 litres).
Two Bendix electric pumps are feeding fuel to the carburetor .
The Sonett II is equipped with horizontal carburetor of over-flow type with separate float chamber. It has the designation Solex 40 DHW.

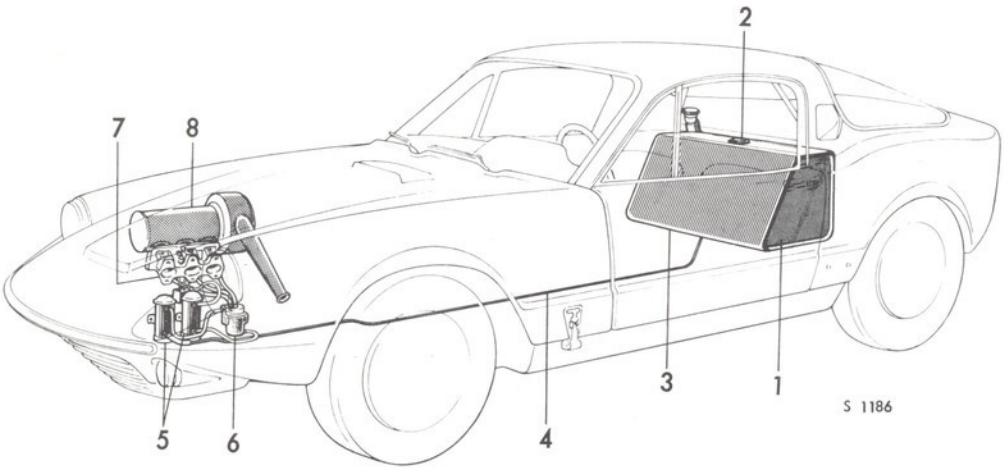

Fuel system

1. Fuel tank
2. Fuel tank gauge
3. Draining plug
4. Fuel pipe
5. Fuel pumps
6. Return fuel chamber
7. Carburetors
8. Air filter

Exhaust system

See Service Manual for Saab 95, 96 and Monte Carlo 850.

Cooling system

As the radiator is placed low in relation to the heat exchanger, there is an expansion tank for water filling. The cooling fan is driven by an electric motor, which is started and stopped by a thermostatically controlled switch, There is also a switch for manual operation on the instrument panel. In other respects, the cooling system is indentical with that of the 95, 96 and Monte Carlo 850.

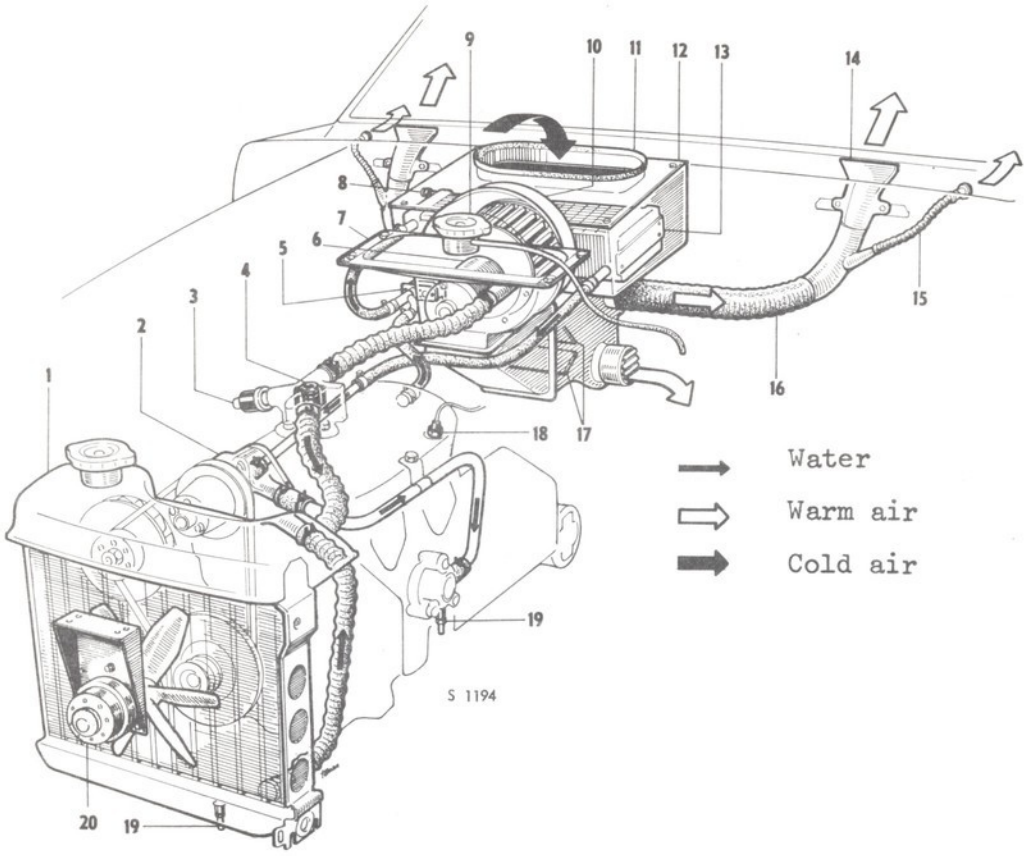

Cooling system

1. Radiator
2. Water pump
3. Thermostat contact
4. Thermostat
5. Thermostat valve
6. Heater fan motor
7. Expansion tank
8. Bleeding nipple
9. Filling cap
10. Fan housing
11. Fresh-air intake
12. Collector box
13. Heat exchanger
14. Defroster jet
15. Side defroster hose
16. Defroster hose
17. Air distributor
18. Temperature transmitter
19. Drain valves
20. Cooling fan unit

Removal and installation

Removal of engine

1. Disconnect the battery earth cable at the battery.
2. Remove the cables to the headlights and direction indicator lights. Mark or note the placement of the cables so that they may easily be refitted later.

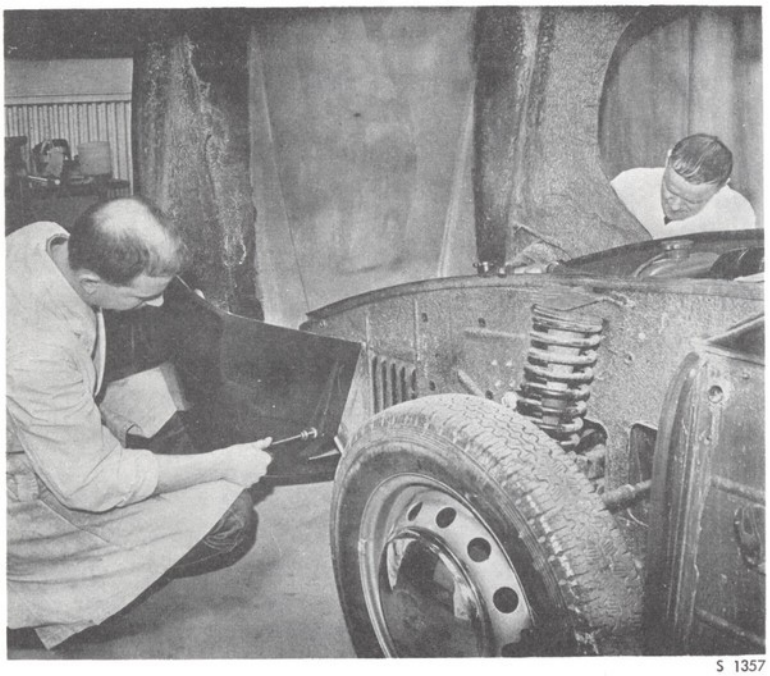

S 1357

Removing the hood

3. The engine hood is removed by first open it wide and then remove the bolts which are hinges for the hood. An assistant, holding the hood on the other side, helps to lift it away.

4. Drain the cooling system.

5. Disconnect the upper and lower coolant hoses from the engine and the hose for the expansion tank.

6. Back off and remove the upper and lower retaining screws of the radiator and remove the radiator.

7. Disconnect the distributor primary cable, the ignition coil cable and the alternator cables. Detach the ventilation hose from the distributor cover and the cables to the cooling fan thermostat.

8. Remove the air cleaner.

9. Disconnect the fuel hose from the pump and the three return hoses from the carburetors.

10. Disconnect the cold start control and the throttle linkage rubber bellows from the carburetor.

11. Disconnect the two hoses of the heat exchanger and the temperature transmitter from the engine block.

12. Disconnect the engine side stay.

13. Disconnect the oil pressure monitor line and the hose from the oil pump. Bend the hose upwards and tie in this position to prevent escape of oil. Cover the connections to prevent foreign matter from entering the oil pump or hose. Back off and remove the four bolts of the oil tank and remove the tank.

14. Remove the alternator.

15. Remove the guard plate on the exhaust manifold.

16. Back off and remove the two muffler flange bolts on the exhaust manifold and slacken the exhaust pipe clamp.

17. Back off the muffler retaining nut and tie the muffler in position to avoid damaging the exhaust pipe.

18. Disconnect the front engine supports from the body. The six bolts are accessible from under the engine compartment floor.

19. Lift up the engine slightly with lifting hook 784058 and block up the gearcase with a 3 1/3"(85 mm) wooden block. See illustration.

20. Back off and remove both starter retaining bolts and place the starter on the engine compartment floor. There is no need to disconnect the cables.

21. Back off and remove the screws used to hold the engine to the gearcase and pull the engine out, taking care not to damage the clutch shaft.

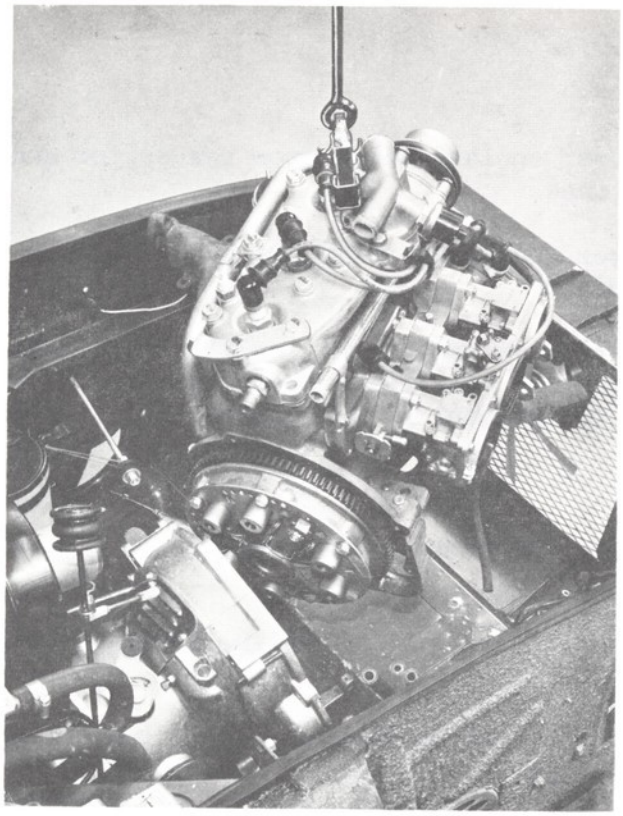

S 1358

Removing the engine

Installation of engine

1. Lift the engine and lower it into the car, using lifting hook 784058 (see illustration). Check that the splines on the clutch shaft are undamaged and smear them with a little grease.

2. Bolt the engine to the gearcase and reconnect the engine earth cable.

3. Refit the starter.

4. Remove the block from under the gearcase and lower the assembly.

5. Refit the front engine supports to the body and the side stay to the engine. Make sure that the engine is not laterally constrained.

6. Refit the muffler by securing it to the exhaust manifold and muffler bracket.
   Note: Do not tighten the bracket nut.

7. Tighten the flange bolts, the bracket nut and the exhaust pipe clamp, in the said order.

8. Refit the guard plate of the exhaust manifold.

9. Refit the alternator in its brackets.

10. Reconnect the hose to the oil pump and the cable to the oil monitor on the pump. Turn the pump shaft round about 100 times by hand, using tool 784195 or a screwdriver. (See lubricating system).

11. Reconnect the heat exchanger hoses and the water temperature transmitter.

12. Reconnect the throttle and cold-start controls.

13. Refit the air cleaner, the fuel hoses and the return hoses.

14. Reconnect the distributor and alternator cables. Refit the distributor ventilation hose.

15. Refit the radiator and the upper and lower coolant hoses.

16. Reconnect the headlights and direction indicators cables.

17. Refill the cooling system.

18. Refit the hood.

19. Reconnect the battery earth cable.

20. Check the clutch pedal play and adjust if necessary.

21. Adjust the ignition setting as described in chapter 3.

22. Test the engine.

NOTE

The oil-pump shaft must be turned round about 100 times after reconnecting the hose from the tank every time the oil pump or engine of the car has been removed. This ensures that the oil pump and oilways will be filled with oil before the engine is started. The pump shaft must be rotated manually, as rotation faster than about 60 rpm would result in damage to the oil pump.

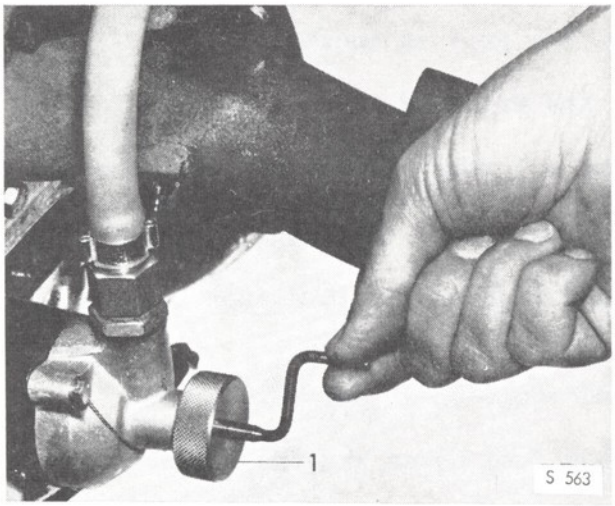

Turning the oil pump with tool 784195

1. Tool 784195

Lubrication system

The oil tank in the Sonett II holds 3 US quarts (3 litres) and has no glass gauge. In other respects the lubrication system is identical with that of Monte Carlo 850.

Carburetor Solex 40 DHW

General

The carburetor installation comprises three horizontal carburetors Solex 40 DHW, mounted on a common throttle body. Through the throttle body runs a common spindle to which the three throttle flaps are attached. Each cylinder is in communication with its own carburetor through separate passages in the induction pipe. Balance between the carburetors is ensured by the provision of a communicating passage, cast in the induction pipe.

The carburetors are fed with fuel from a separate common float chamber, placed on the engine compartment floor.

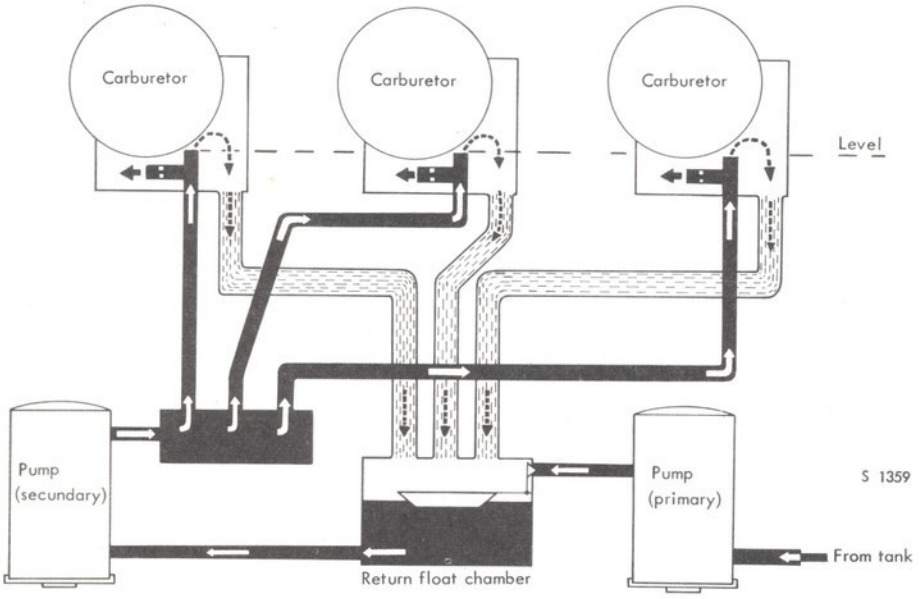

Fuel system principle

The fuel system includes two electrical fuel pumps, type Bendix. One of these feeds fuel from the tank to the float chamber. The other pump supplies the carburetors with fuel from the float chamber. The design of the carburetors makes superfluous fuel return to the float chamber through hoses.

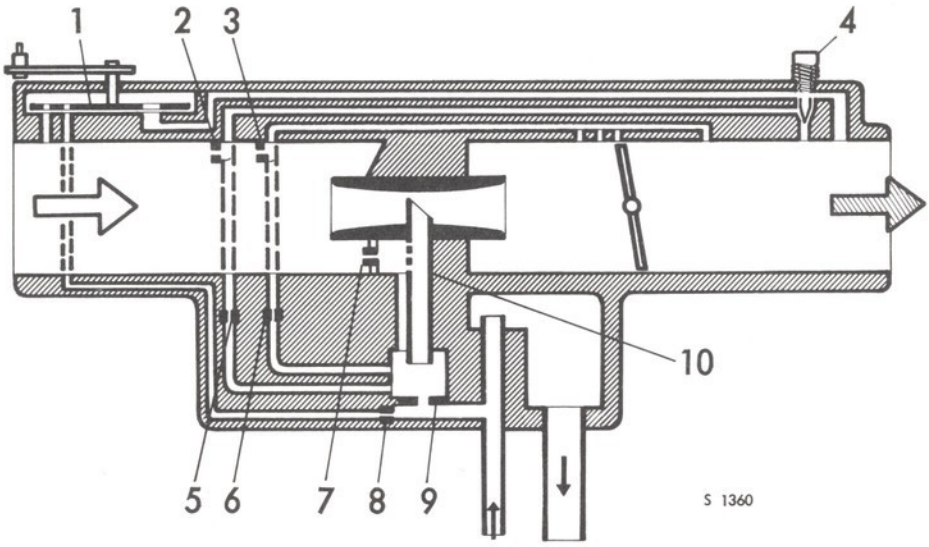

Carburetor, Solex 40 DHW. principle

1. Slide valve
2. Idling air jet
3. Low-speed air jet
4. Air-regulating screw
5. Idling fuel jet
6. Low-speed fuel jet
7. Emulsion jet
8. Starting fuel jet
9. Main jet
10. Emulsion tube

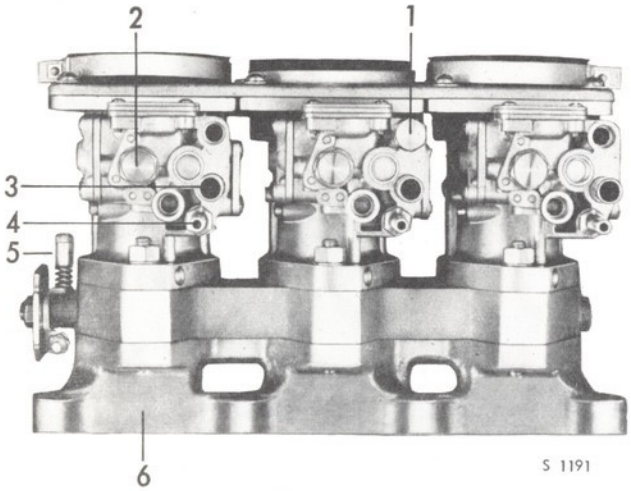

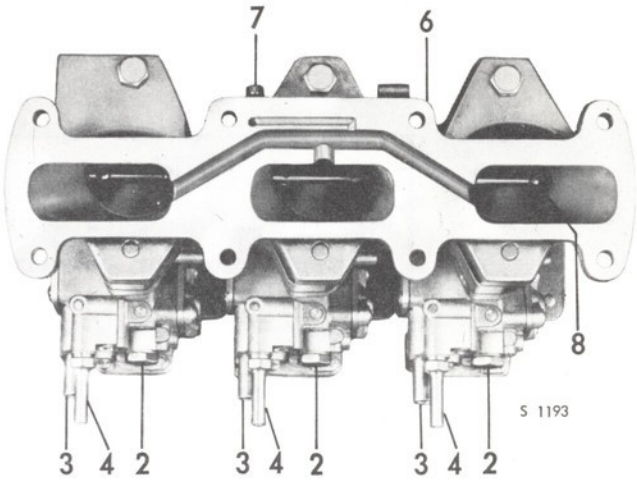

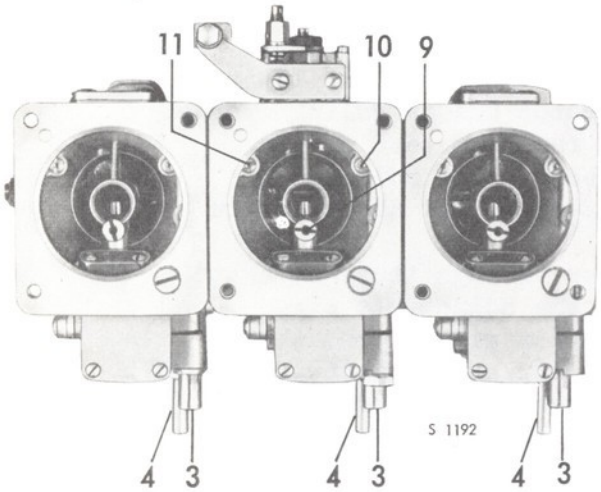

Carburetors

1. Idling fuel jet
2. Retainer, main jet
3. Outlet pipe, fuel
4. Inlet pipe, fuel
5. Slow-running adjustment screw
6. Suction pipe
7. Volume-control screw
8. Throttle valve
9. Emulsion jet
10. By-pass air jet
11. Idling air jet

The carburetors have jet combinations for four different systems, viz. high-speed, low speed, idling and cold-starting system. These provide the engine with the appropriate fuel/air mixture to suit different loads and temperature conditions.

The high speed system comprises the choke tube, the main jet, the emulsion jet and the emulsion tube, which combine to ensure that the carburetors give the right fuel/air mixture within the high speed range.

> NOTE!
>
> The "A" marked main jet holder of certain other carburetor types must not be used.

The low-speed system comprises the fuel jet, the air jet, and three passages drilled in the throttle body close to the throttle flap.

The idling system consists of the fuel jet, the air jet, and the air-regulating screw for the fuel/air mixture. The latter is located on the throttle body. Only the middle carburetor has an idling system. Besides from the idling system, the engines receives part of its idling fuel through a hole in the throttle body, this hole is an extension of the low-speed system, (and located behind the throttle flap).
In the idling system, fuel and air first pass through their separate jets, whereupon they are mixed and then via the adjustable air-regulating screw conveyed out into the induction pipe. Here, the fuel/air mixture is mixed with the induction air and distributed to the different cylinders. The idling speed is adjusted by means of the screw on the throttle spindle and the air-regulating screw.
Only the middle carburetor has a cold-starting device. Through a special passage, this communicates with the induction pipe, where the fuel/air mixture from the cold-starting device is distributed to the cylinders. The cold-starting device comprises the fuel jet and a sliding valve for regulating the volume of the fuel/air mixture.
The sliding valve has two positions: half open and wide open.
The latter position is spring-loaded for automatic return to the half-open position. The throttle flap must not be opened while the cold-starting device is being used, since this would put the device out of order.

The float chamber is located on the engine compartment floor, beneath the carburetors. The fuel level in the chamber is determined by a float and a needle valve.

A fuel filter is located in the float chamber connection pipe from the pump. It should be cleaned in connection with service inspections.

Removal, disassembly, assembly and installation

1. Remove the air cleaner.
2. Disconnect the fuel line from the secundary pump at the branching and place a plug in the hose.
3. Remove the rubber bellows from the throttle spindle plate.
4. Remove the cold start control, the fuel hoses and the alternator bracket.
5. Remove the carburetors with induction manifold.
6. Cover the inlets to prevent the entry of foreign matter into the engine.
7. Remove the throttle-body assembly with the carburetors from the induction manifold.
8. Clean the outside of the carburetors and remove them from the throttle-body assembly. Remove the gaskets.
9. Check all jets.
10. Check the slide of the cold-starting device for face wear.
11. Check the throttle spindle for wear.
12. After having cleaned all parts and passages, reassemble the carburetors.
13. Refit the carburetors to the throttle-body assembly. Use new gaskets.
14. Refit the throttle-body assembly with the carburetors on the induction manifold (use new gaskets) and connect the unit to the engine.
15. Refit the air cleaner, fuel hoses and cold-starting device. Warm up the engine and adjust the idling speed.

Fuel level

The fuel level in carburetor Solex 40 DHW is determined by the carburetor design, which cannot be adjusted. The fuel level in the float chamber does not need to be adjusted, as it can vary within wide limits with out influencing the carburetor function. In case of leaks or not enough fuel in the float chamber, it can however be necessary to check the needle valve and its bearing.

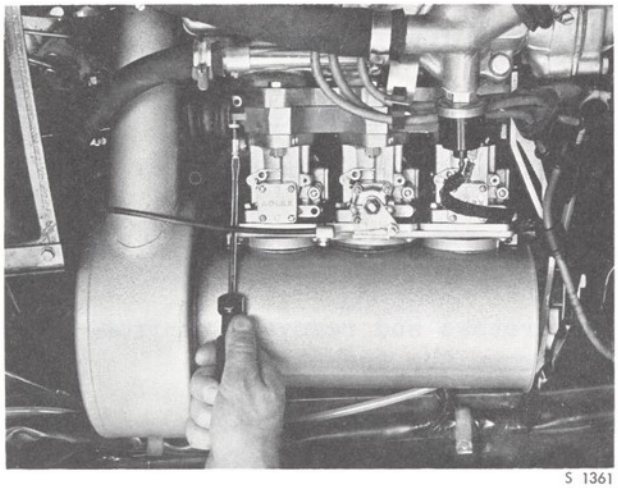

S 1361

Setting the idling speed with the throttle axle screw

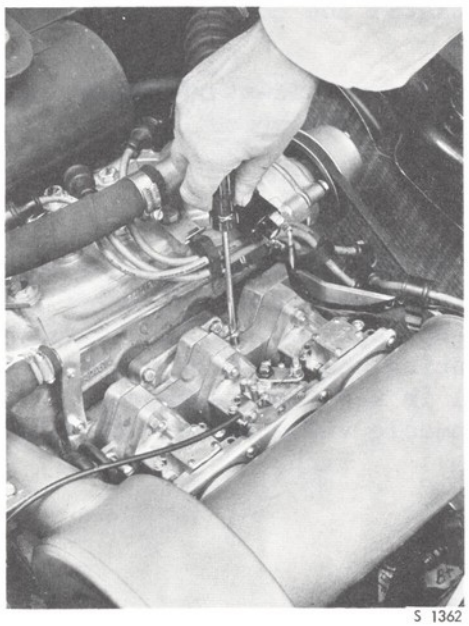

S 1362

Setting the idling speed with the air-regulating screw

Idling adjustment

Adjust the engine idling speed while the engine is warm.

1. Allow the engine to idle.
2. Adjust the idling speed to about 600-750 rpm with the slow-running adjustment screw.
3. Adjust the volume-control screw to give the highest idling speed.
4. Readjust the slow-running adjustment screw until a suitable idling speed, i.e. 600-750 rpm, is obtained. The recheck the position of the volume-control screw as above.

Repeat this procedure until the correct idling speed is obtained.

After setting the volume-control screw properly for idling (see instructions above), check for getting the right answer at acceleration. If noticing - when opening the throttle at a moderate speed - that the engine shows tendency temporarily to go down in number of revolutions, slacken the volume-control screw enough to prevent the increase of the number of revolutions from being reduced. To meet this requirement, it might prove necessary to make the gap of the volume-control screw wider by 1/4-1/2 turn. Then, adjust the idling speed as prescribed by means of the throttle screw.

Accelerator

Removal

1. Detach the pedal plate from the rubber roller, and remove the roller from the lever. In case of removing the accelerator pedal, loosen the two screws - located underneath the mat - which secure the pedal mounting plate to the floor plate.
2. Unhook the return spring. See fig.
3. Disconnect the ball-joint link from the lever.
4. Back off the screws for the two lever bearings, and collect the leaf spring.
5. Remove the rubber seal from the dash panel, and take out the lever with the seal facing forwards.
6. Remove the rubber seal from the lever.
7. Ease the rubber boot off the plate on the carburetor throttle spindle.
8. Pull the shaft forwards out of its bearings.

Reassembly

All worn or damaged parts shall be replaced by new ones.

1. Refit the shaft in its bearings on the heater casing, and reconnect the shaft, together with the rubber boot, to the carburetor.
2. Ease the rubber seal onto the lever and pass this through the dash panel from the front. Don't forget the leaf spring.
3. Reconnect the ball-joint link between the lever and the shaft.
4. Hook the return spring onto the shaft.
5. Refit the rubber roller to the lever, and place it in the guide on the underside of the pedal.
6. Check that depression of the accelerator pedal gives full deflection of the throttle spindle.

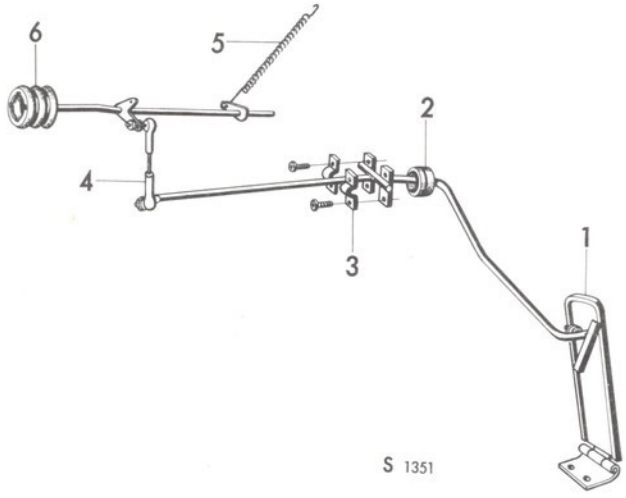

Accelerator

1. Accelerator pedal
2. Rubber seal
3. Leaf spring
4. Ball-joint link
5. Return spring
6. Rubber boot

Air cleaner

General

The air cleaner consists of a filter housing with a replaceable paper filter-insert. By their design, the filter housing and its cover serve also as a muffler for the induction air. This is conveyed through a pipe from a pre-heater device on the exhaust manifold.

Filter insert

The replaceable filter insert shall normally be changed at intervals of 12.000 - 18.000 miles (20.000 - 30.000 km). When driving on dusty roads, the filter insert should be changed more often. When changing the filter insert, remove the air cleaner and clean it carefully in the interior. The filter insert must be protected from moisture, and should never be washed or oiled. Every 6.000 miles (10.000 km), the filter insert should be cleaned. To this effect, remove the insert, then cautiously blow same clean applying compressed air from the inside.

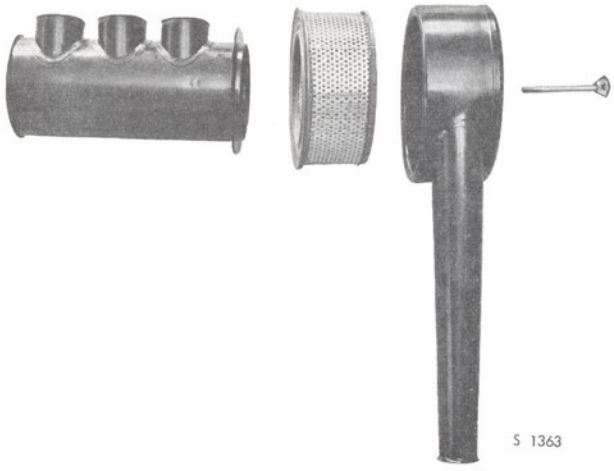

Air cleaner

Pre-heater

To pre-heat the induction air for the carburetor, there is a protective plate in the exhaust manifold, below which the pipe from the air cleaner opens out. See fig.

Its task is to prevent ice formation in the carburetor, which may occour in weather conditions with ambient temperatures of between 25 and 60°F (-5 and +15°C) and a relative humidity of more than 55%.
Icing in the carburetor is indicated by engine failure when idling, or an increased fuel consumption - in serious cases in combination with an obvious drop in performance level.

IMPORTANT

The pre-heater device must not be disconnected except for in extremely hot climates or in long periods of very hot weather. Otherwise, there is a risk of icing in the carburetor.

The pre-heater device can be adjusted to "Summer" position by fitting the air cleaner with the pipe above the protective plate. See fig.
The adjustment should be made when the temperature for any great length of time is above or below 50°F (+10°C).

Above 50°F (+10°C) - "Summer" position
Below 50°F (+10°C) - "Winter" position

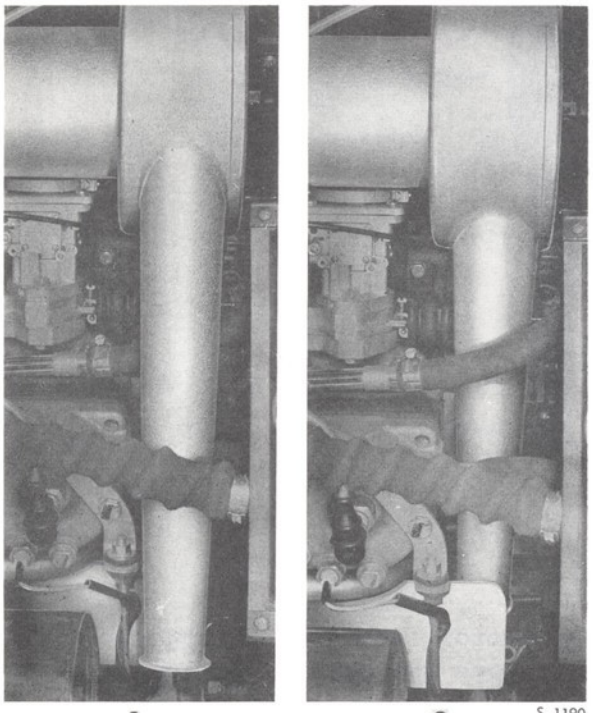

Pre-heater

1. Summer position

2. Winter position

Fuel pump

General

The Saab Sonett II is equipped with Bendix fuel pumps.
The Bendix fuel pump consists of a unit containing a solenoid section, a breaker unit, a pump plunger, valves and a filter. The solenoid section encompasses the plunger, at the lower end of which the outlet valve is situated. The inlet valve is fitted in a special valve housing under the plunger, and is attached to the solenoid housing by three screws. The pump plunger spring rests against the lower section of the valve housing. In the upper end of the pump plunger there is a spring which dampens the plunger movement in the upper position. The pump is equipped with a filter, as well as a magnetic plug for the collection of particles. The filter and magnetic plug are accessible when the bayonet-socketed cap has been taken off.

The breaker unit operates in a hermetically sealed, gasfilled housing which is situated in the upper section of the pump housing. Closing and breaking work magnetically under the influence of the pump plunger.

When the pump plunger is in the upper position the breaker unit is closed and if the ignition is turned on the solenoid coil becomes conductive, whereupon the power attracts the plunger and pulls it downwards, and compresses the plunger spring.

When the plunger moves downwards the fuel is transferred from the underside to the overside of the plunger through the outlet valve. Immediately before the plunger reaches the lowest position the circuit to the solenoid coil is broken, whereupon the plunger spring pushes the plunger back and the fuel above the plunger is forced through the outlet connection to the carburetors. New fuel is transferred through the inlet valve to the underside of the plunger simultaneously. When the plunger reaches the upper position the cycle is repeated.

NOTE
The pump can only work in one position i.e. with the bayonet cap downwards.

Cleaning and adjusting

Remove the bayonet cap at the lower end of the pump. Remove the filter and clean it. Wash the cap and gasket in white spirit, and see that the magnetic plug is cleaned of particles.

The breaker mechanism is not accessible for adjusting. If there is any fault in this unit or the solenoid section, the pump housing must be replaced.

Disassembly

1. Take off the bayonet cap. Remove gaskets, filter and magnetic plug.
2. Let down the locking wire, then remove the washer, the O-ring and the inlet valve from the barrel.
3. Pull out spring and piston with pressure valve.

Assembly

When the parts have been washed and blown clean, and the plunger and valves have been examined regarding wear and sealing properties any defective parts must be replaced and the pump assembled as follows:

1. Oil the plunger sparingly with thin oil, install the plunger spring, then push the plunger into the barrel.
2. Fit the inlet valve with spring and retainer into the valve housing.
3. Fit O-ring, washer and locking wire.
4. Put the filter on to the valve housing, and fit the bayonet cap with gasket and magnetic plug.
5. Test the pump in respect to pressure and capacity, by connecting it to a testing instrument.

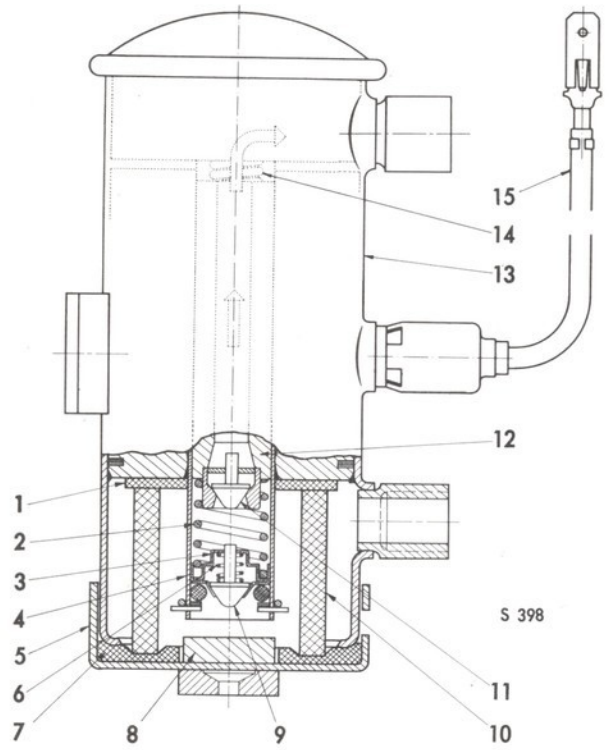

Fuel pump

1. Gasket
2. Plunger spring
3. Spring retainer
4. Valve housing
5. Bayonet cap
6. Valve spring
7. Gasket
8. Magnetic body
9. Valve
10. Filter
11. Valve
12. Plunger
13. Pump housing
14. Damping spring
15. Electrical connection

Before removing the fuel tank, see if possible to it that the tank contains as little fuel as possible.

1. Remove the luggage compartment floor.
2. Detach and remove the battery.

> IMPORTANT
>
> Because of the fire-risk, the battery must be removed.

3. Detach the lining which is cemented on to the tank in the luggage compartment.
4. Detach the extension hoses of the filler- and the venting tubes from the tank. Plug up the pipes.
5. Detach the fuel line from the tank. This is accessible through a hole in the cross member behind the seats. Keep a plug within reach, makin it possible to plug the tank quickly.
6. Disconnect the retaining straps from the rear wall of the tank.
7. Move the tank backwards to the effect that the cables from the fuel tank gauge can be removed.
8. Move the tank backwards until it is clear of the cross member. Then - with one of the small ends first - lift it over the cross member and out through the right-hand door.

> NOTE!
>
> Protect the upholstery from dirt and fuel when lifting out the tank

Installation of the tank is made in the corresponding way.

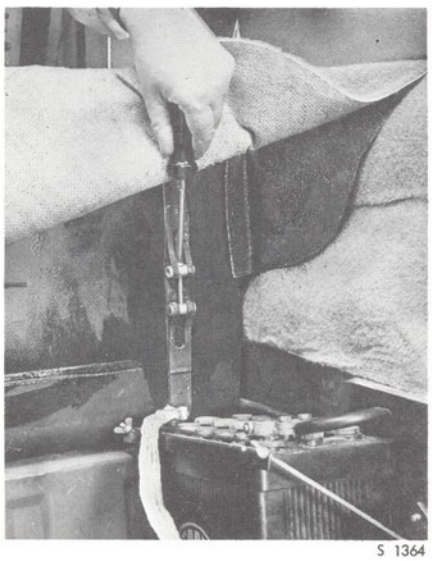

S 1364

Removal of fuel tank.

Exhaust system

See the Service Manual, Saab 95, 96 and Monte Carlo 850.

Note! The rear muffler has also a side support, and is fastened to the wheelhouse with a bolt.

Cooling system

Removal of radiator

1. Drain off the coolant
2. Disconnect the water hoses
3. Back off the upper and lower retaining screws of the radiator
4. Lift out the radiator

Installation of radiator

1. Replace the radiator in position, and screw in the upper and lower retaining screws.
2. Reconnect the hoses. Fit the clamps.
3. Refill the radiator with water.

Expansion tank

Removal and installation

1. Loosen the clamp on the water hose.
2. Remove the hose.
3. Loosen the retaining screws of the tank.
4. Remove the tank.

Installation is made in the corresponding way.

Cooling system

Removal of radiator

1. Drain off the coolant.
2. Disconnect the water hoses.
3. Back off the upper and lower retaining screws of the radiator.
4. Lift out the radiator.

Installation of radiator

1. Replace the radiator in position, and screw in the upper and lower retaining screws.
2. Reconnect the hoses. Fit the clamps.
3. Refill the radiator with water.

Expansion tank

Removal and installation

1. Loosen the clamp on the water hose.
2. Remove the hose.
3. Loosen the retaining screws of the tank.
4. Remove the tank.

Installation is made in the corresponding way.

Cooling fan

The cooling fan is located in front of the radiator, and driven by an electric motor - make Kenlowe. The fan motor and the fan can be removed in the following way.

Removal and installation

1. Loosen the retaining screws of the radiator grill. Remove the grill.
2. Detach the electrical cables of the fan motor.
3. Loosen the retaining screws of the fan motor.
4. Lift the fan motor and the fan out through the air intake.

The installation is made in the corresponding way.

As regards water pump, thermostat, cleaning, inspection and testing of the cooling system, see the Service Manual Saab 95, 96 and Monte Carlo 850.

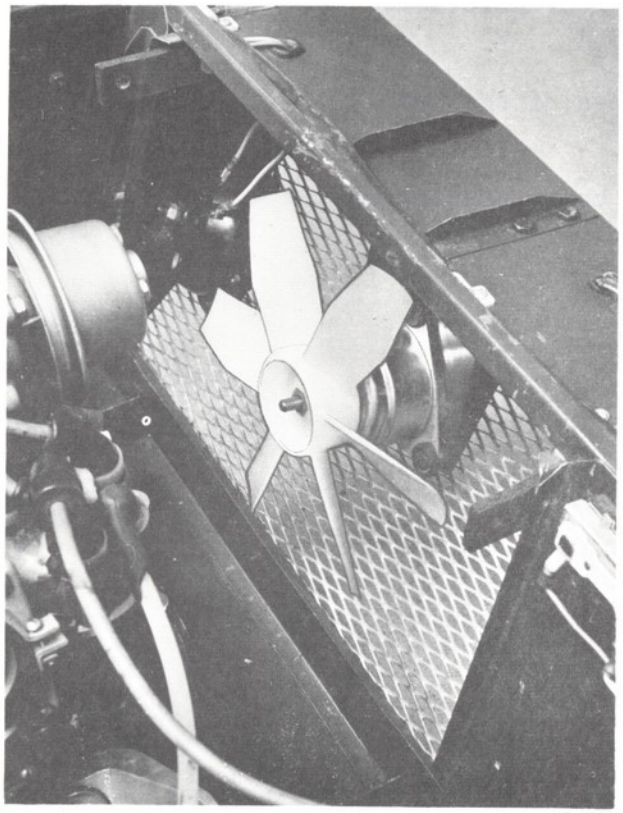

S 1365

Cooling fan.

Contents

x) See Service Manual for Saab 95, 96 and Monte Carlo 850.

Description

The electrical system in the Sonett II differs from that of Monte Carlo 850 only as regards the elctrical motor for the radiator cooling fan and the thermostat switch for same, and by having no spotlight and foglight.For the latter, the cables are, however, in place.

Battery
See Service Manual Saab 95, 96 and Monte Carlo 850. Its capacity is 44 Ah.

Ignition system

In the Sonett II, the distributor is identical with that in the 1965 model of Saab Sport. Thus, it's advance is of the one-stage centrifugal type. See Service Manual Saab 95, 96 and Monte Carlo 850.

Electrical equipment, other

The interior lighting comprises a map reading lamp, located to the right beneath the instrument panel. It is operated with a switch at the lamp, and a door contact.

A selfreturning reversing switch beneath the wheel operates the current to the direction indicators.

A green warning lamp on the instrument panel glows when the indicator light is on.

The horns are operated with a press button located in the center of the wheel. One high-pitch and one low-pitched horn are harmonized to give a high-penetration signal.

The windshield wiper motor has two speeds, and via two push rods it drives the two windshield wipers and is operated with a switch on the instrument panel. The switch is combined with the windshield washer control, which is electrical.

Wiring and fuses
See the Service Manual Saab 95, 96 and Monte Carlo 850.

Oil warning system
See the Service Manual Saab 95, 96 and Monte Carlo 850.

Generator

The Sonett II is equipped with an A.C. generator. See Service Manual for Saab 95, 96 and Monte Carlo 850.

Starter
See Service Manual for Saab 95, 96 and Monte Carlo 850.

Lighting

The road lights comprise, for the front car: headlights, direction indicators, and parking lights, and at the rear: number plate light, tail lights, stop lights, and direction indicator lights. Besides, there are back-up lights, which are automatically switched on when engaging the reverse gear.

The headlight inserts are adjustable, both vertically and horizontally. The headlights are switched on and off with a pull switch on the instrument panel. The headlights are dimmed with a dimmer switch by the left foot.

A warning lamp on the instrument panel glows when the headlights are on high beam. The parking lights are always on together with the headlights, regardless of whether these are dimmed or not.

Battery

The battery has a capacity of 44 amp-hours (Ah). See also the Service Manual for Saab 95, 96 and Monte Carlo 850.

Distributor

The Sonett II is equipped with a distributor of the centrifugal type, Bosch designation 0 231 120 023 JF3 (R) (VJ3 BR11T). See Service Manual for Saab 95, 96 and Monte Carlo 850.

Spark plugs

Recommended spark plugs Bosch MGV 260 T31 S

The spark plugs for the Saab Sonett II are of the so-called "Hilfmasseelektrodtyp". This means that the spark plug is equipped with a help electrode, which operates mainly a start and at light charge, while the ring electrodes serve in the other operation fields of the engine.

The design of the electrode, together with the fact that the center electrode is made of a silver alloy, has made it possible to choose a thermal value by which the spark plug covers the entire operation field of the engine, from city driving to hard driving.

The spark plug has a pre-spark gap.
The electrode gap of the starting electrode is 0.022-0.024 in. (0.55-0.60 mm). By the service of the spark plug, an increase of the electrode gap takes place, and when the gap has reached a certain width, starting difficulties or break downs may occur at light charge. There is a limited possibility of adjusting the electrode gap by bending the starting electrode towards the insulator by means of a pair of polygrip pliers. See figure.

NOTE! The electrode must not be exposed to blows, nor be bent in a way different from that described above. Otherwise, the electrode may crack in the welding point. It is not permissible to clean the spark plug by blasting.

Spark plug

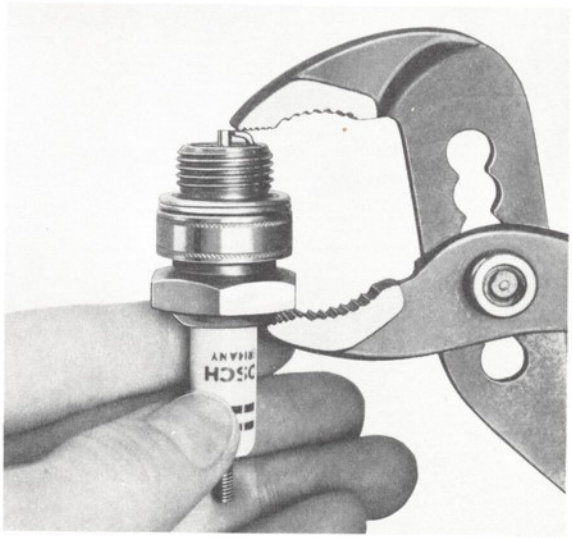

Adjusting the electrode gap

Lighting

Headlights

The headlights are recessed in the hood. The left and right headlight inserts are identical. Thus they can be fitted on either side without alteration. The headlights are of the Sealed Beam type, and are dimmed with a foot dimmer switch. A warning lamp on the instrument panel glows blue when the headlights are on high beam. The dimmer switch is located on the foot plate to the left of the pedals.

The unit is to be changed as follows, see fig.

1. Remove the clip-provided button.
2. Insert a screwdriver in the hole from underneath and pry the chromed ring off.
3. Loosen the three attachment screws holding the retaining ring. The Sealed Beam unit can now be removed.

As regards adjustment of the lights, see Service Manual Saab 95, 96 and Monte Carlo 850.

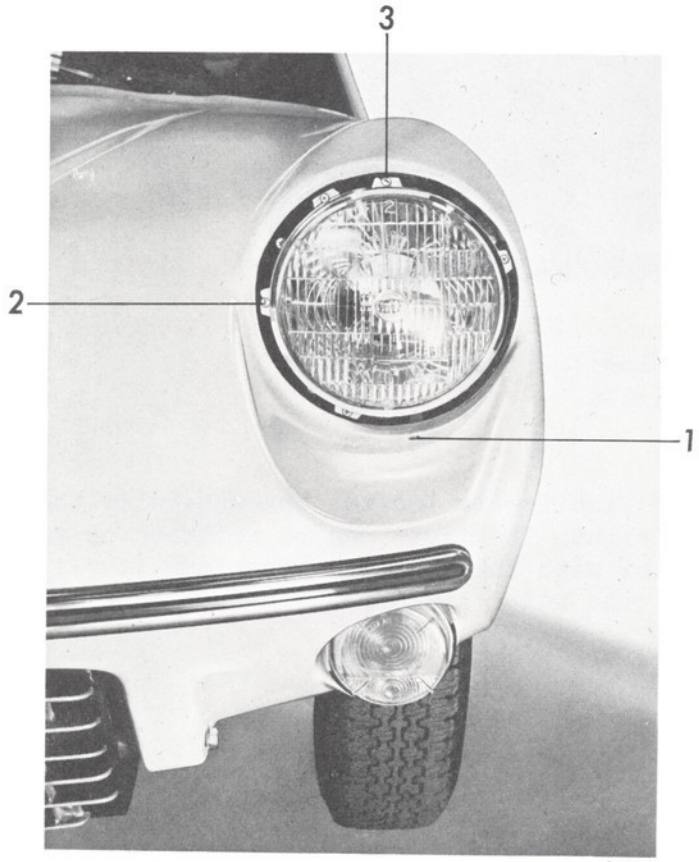

Screw for adjusting headlights

1. Button
2. Screw for horizontal adjustment
3. Screw for vertical adjustment

Parking-, stop- and number plate lights

Loosen the screws and remove glass (and frame). Replace the faulty bulb and check that it is firmly positioned and makes good contact. Clean the lamps and the reflector. Fit the glass (and frame), and be sure to obtain proper sealing against the rubber packing.
Concerning the front direction indicator lights, see fig.
The glass is loosened from the lamp by turning.

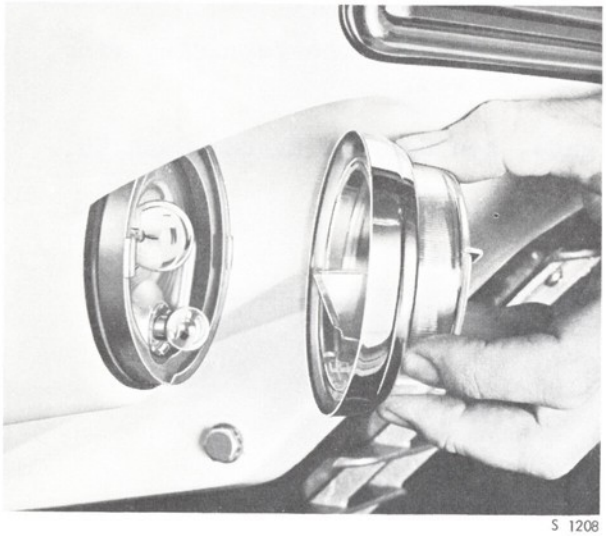

Replacing bulbs for front direction indicator lights.

Interior lighting

The lamp for the interior lighting is located beneath-below the instrument panel, to the right. The light can be switched on and off with a door contact, or with the switch on the lamp itself. As regards replacement of the bulb, see Service Manual Saab 95, 96 and Monte Carlo 850.

Horns

See Service Manual Saab 95, 96 and Monte Carlo 850.

Windshield wipers

See Service Manual Saab 95, 96 and Monte Carlo 850.

Windshield washers

The Sonett II is equipped with an electrically driven windshield washer pump, which is started with the same switch as that for the windshield wipers.

Electrical controls and switches

The ignition lock is located on the instrument panel, to the left of the steering wheel. It is designed so, that in the first position right the ignition is on. When pressing in the key and turning it further, the starter is engaged. Besides the ignition, current is provided through the ignition lock for the following equipment and lights:

Heater fan, radiator cooling fan, windshield wipers and washer, direction indicators, fuel gauge, temperature gauge, horns, back up lights, cigarette lighter, charge indicator light and oil warning system.

The headlights are operated with the pull switch combined with rheostat. The intensity of the instrument panel lights is regulated by turning the knob when pulled out.

The headlights are dimmed by a foot dimmer switch. The switch for the heater fan has two positions, full speed and half speed. The windshield wiper switch has three positions. The first gives the motor low speed, the second gives high speed, and the third starts the electrical windshield washer too. The stop-light switch is influenced by the brake-fluid pressure, and completes the circuit to the stop-lights once a certain pressure is reached.

Wiring diagram

The range of the electrical system is shown by the wiring system on the next page. To simplify the identification. the wires have been covered with insulation of different shades, as follows:

Black	1, 7, 7b, 18, 19, 41, 46, 47, 71, 80, 105, 105a, 106, 107, 108, 109, 123, 123c, 124, 125, 125a, 135, 135a, 138, 139, 147
Red	5, 21, 28, 28e, 28f, 28g, 32, 34, 39, 61, 63, 65, 67, 68, 72, 83, 86, 86e, 111, 126, 129
White	20, 23a, 23b, 24b, 40, 40c, 42b, 95, 97, 98, 118, 131
Green	16, 22, 22f, 50, 51, 53, 54, 55, 57, 58, 60, 82, 86, 88, 101, 102, 103, 110, 119, 133, 145. 146, 147, 148, 150
Yellow	17, 23, 23c, 24a, 33, 43, 44b, 62, 66, 73, 81, 84, 99, 100, 112, 112e, 130
Blue	13, 25a, 41, 42a, 64, 149
Grey	4, 25b, 29, 35, 44a, 69, 70, 74, 75, 85, 89, 93, 113, 117, 142, 142a, 144
Brown	14, 30, 88, 137c, 141

Key to numbers in Figure

1. Direction indicators and side lights
2. Headlights
3. Horn
(4. Foglight and spotlight)
5. Distributor
6. Spark plugs
7. Voltage regulator
8. Generator
9. Starter
10. Battery
11. Fuel pumps
12. Fuse box
13. Ignition coil
14. Series resistance
15. Oil warning relay
16. Oil gauge
17. Cooling fan
18. Thermostat contact
19. Temperature transmitter
20. Back-up light switch
21. Stop lamp switch
22. Heater fan motor
23. Wiper motor
24. Windshield-washer pump
25. Charge indicator light
26. Indicator light oil pressure
27. Indicator light fuel
28. Direction indicator repeater light
29. High beam indicator light
30. Ignition and starter switch
31. Tachometer
32. Coolant thermometer
33. Fuel gauge
34. Speedometer, mileage recorder and trip meter
35. Electric clock
36. Cigarette lighter
37. Flasher
38. Manoeuvre relay, headlight flasher
39. Manoeuvre relay, light
40. Dimmer relay
41. Dimmer switch
(42. Spotlight switch)
(43. Fog light switch)
44. Headlight switch and instrument illumination rheostat

45. Windshield wiper and washer switch
46. Map reading light with switch
47. Map reading light switch
48. Fuel tank gauge
49. Heater fan switch
50. Cooling fan switch
51. Warning flasher switch
52. Direction indicator switch with headlight flasher
53. Horn button
54. Stop lights and direction indicator lights
55. Tail lights
56. Back-up lights
57. Number plate light

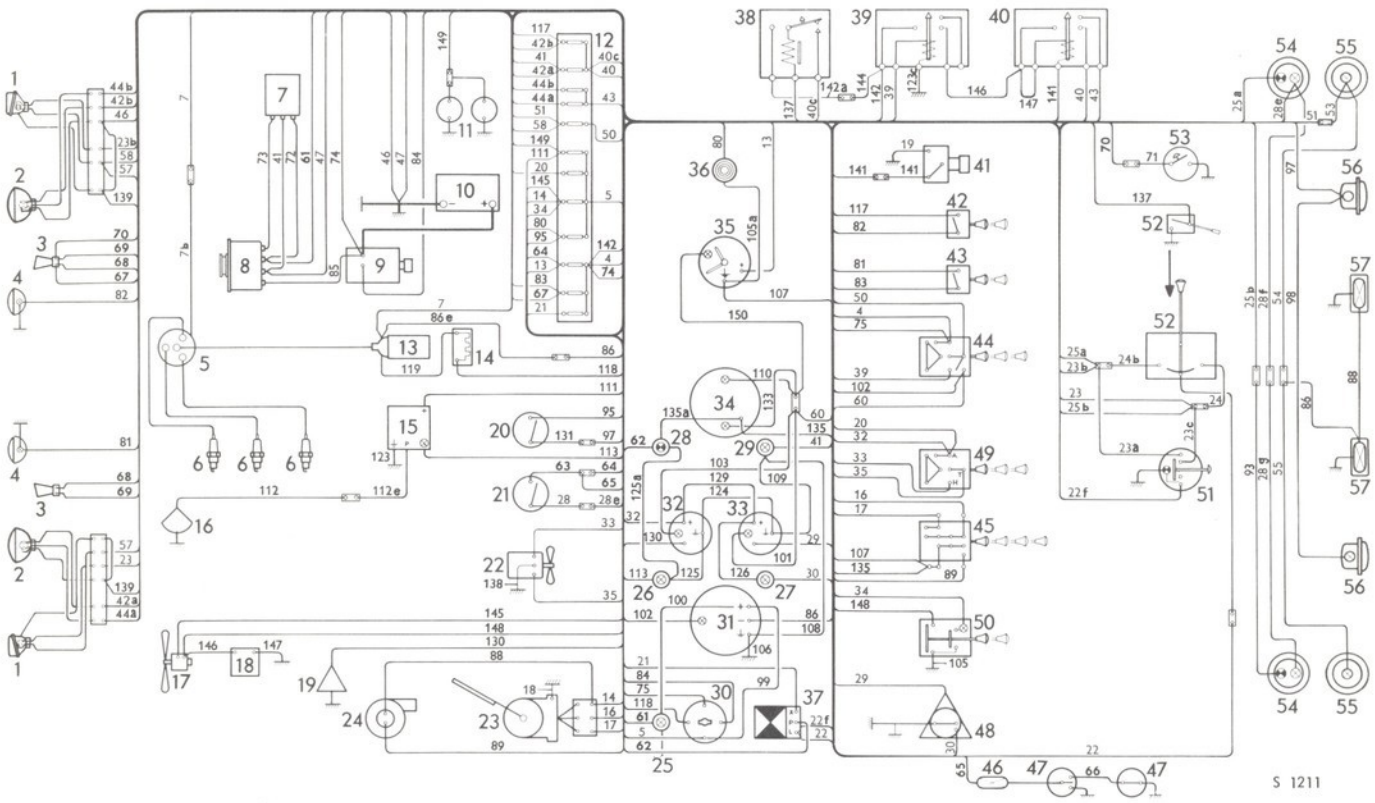

Wiring diagram

Cable numbers refer to table on opposite page

Contents

x) See Service Manual for Saab 95, 96 and Monte Carlo 850.

General

The transmission in the Sonett II is mainly the same as that in Monte Carlo 850. Thus, clutch, joints, drive shafts and the four-speed gearbox are the same. The clutch control is, however, mechanical instead of hydraulical.

Clutch control

General

The clutch pedal is carried in a pedal frame under the pedal sheet. The pedal frame is bolted to the dash panel and the floor. Movement of the clutch pedal is transmitted to the clutch linkage lever (under the transmission case) by a clutch cable, which is a steel wire in a protecting steel cover. A spring on the clutch lever returns the pedal when releasing it. The protecting steel cover of the clutch cable is attached at the dash panel and is connected to the gearbox clutch lever via a lead pulley and a push rod. The push rod is placed between the lever and an attachment, to which the cable cover is connected with an adjustment screw. The clutch cable is tensioned between the clutch pedal and an attachment under the engine. By turning the adjustment screw, the play of the clutch pedal is changed.

Clutch cable

Removal

The cable may be removed without disturbing the pedal frame.

1. Screw in adjusting screw sufficiently to permit release of cable from lug under engine.
2. Disconnect adjusting screw, attachment and link rod from clutch cable.
3. Remove pedal sheet on pedal side.
4. Back off nut outer cable attachment to dash panel and remove washer.
5. Remove outer cable attachment (slit on one side).
6. Release inner cable from fork connection to clutch pedal. Fork is slit on side to permit removal of cable.
7. Draw out clutch cable forwards.
8. Collect nut and lockwasher for outer cable attachment.

Installation

1. Pass in cable from front, through hole in dash panel. From other side of panel, fit lock washer and nut on cable.
2. Connect inner cable to fork on clutch pedal.
3. Refit outer-cable attachment with lockwasher and nut.
4. Reconnect adjusting screw to link-rod attachment.
5. Refit link rod to attachment.
6. Pass front end of clutch cable into adjusting screw and lead inner cable to lug on underside of engine. Do not omit to refit rubber bushing on cable.
7. Check location of link rod in clutch linkage lever.
8. Unscrew adjusting screw sufficiently to secure correct clutch pedal movement, i.e. 3/4 - 1 in. (20-25 mm).
9. Refit pedal sheet and rubber mat.

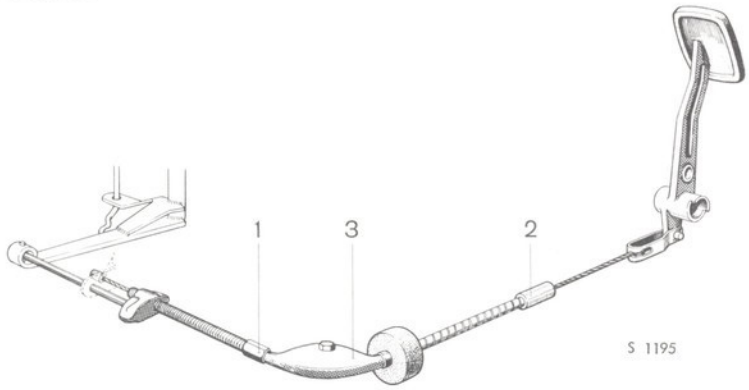

Clutch cable

1. Adjusting screw
2. Outer wire attachment at dash panel
3. Lead pulley

Adjustment of clutch-pedal free movement

Free movement of the clutch pedal, measured at its top, should be 3/4 - 1 in. (20-25 mm). Wear of the clutch facings reduces this movement, but it must not become less than 3/8 in. (10 mm). Adjust the movement by means of the adjustment screw (see fig.) on the clutch cable. The screw is readily accessible on the left side of the engine compartment. Turning to the right (i.e. screwing in) increases pedal free movement.

Brake and clutch pedals

Removal

Each pedal may be removed separately, if the pedal shaft is dismounted. However, in order to facilitate the operation the entire pedal frame ought to be dismounted.

1. Remove the mat and back off screws retaining pedal sheet.
2. Lift away both halves of pedal sheet. The left half may be stood against inner panel; if it is to be removed from the car, cables must be disconnected.
3. Slacken clutch cable by a screwing in adjustment screw at front end of cable (i.e. increase pedal play).
4. Disconnect inner cable from fork at clutch pedal (fork is slit at one side for removal of cable).
5. Disconnect brake pedal from master cylinder by backing off locknut, see fig., and unscrew maincylinder push rod (hex head is visible outside rubber bellows).
   Brake pedal may also be disconnected from cylinder by releasing push rod from rubber bellows; the rod will then accompany the pedal frame when this is lifted away.

6. Remove bolts fixing pedal frame to floor and dash panel. The three dash panel bolts also hold the master cylinder. Nuts are accessible from the engine compartment.

Installation

1. Locate pedal frame. If master-cylinder push rod has not been removed with frame, pass rod into master cylinder and work rubber bellows over it.
2. Fix pedal frame and master cylinder with the three bolts on front of master cylinder flange.
3. Fit both bolts securing pedal frame to floor pan. Insert these bolts from underside of pan.
4. If master-cylinder push rod was disconnected from fork at brake pedal, reconnect rod to fork. Note here that brake-pedal free movement must be adjusted before locknut is tightened. Correct movement at pedal tip is 0.12-0.24 in. (3-6 mm).
5. Tension clutch cable by screwing out adjustment screw, adjusting clutch-pedal free movement to 3/4-1 in. (20-25 mm), measured at top of pedal.
6. Replace both parts of pedal sheet and fit fixing screws. If cables have been disconnected, reconnect these before replacing left half of pedal sheet.
7. Refit the mat.

Lubrication

Lubricate clutch and brake-pedal bearings with oil, also push-rod bearing pin in brake pedal. Oil holes are provided at the right of each pedal arm, as illustrated.

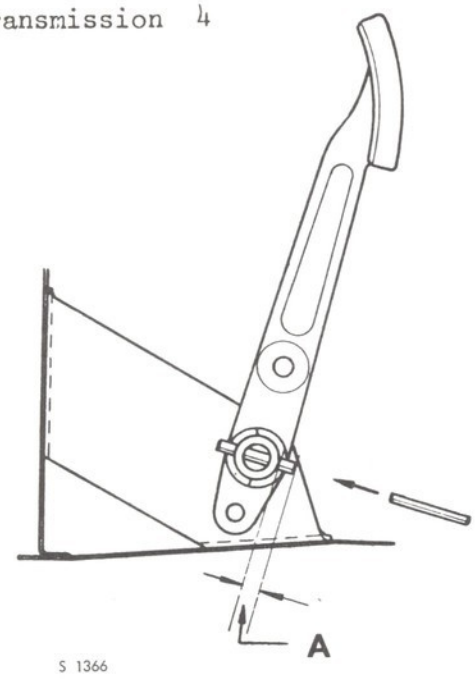

Slotted pins, pedal shaft

A = 5/16 ± 1/16 in. (8 ± 1.5 mm)

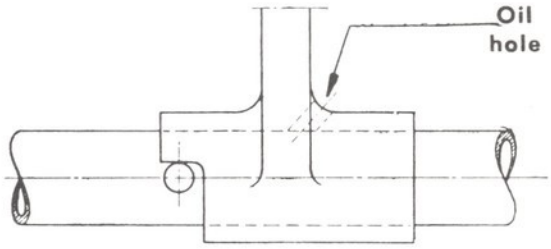

Oil holes in brake and clutch pedals

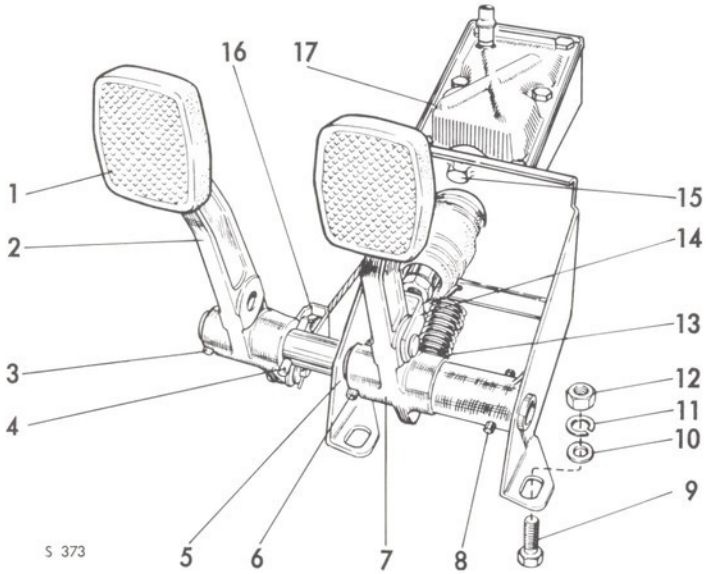

1. Brake pedal pad
2. Clutch pedal
3. Slotted pin
4. Slotted pin
5. Bracket
6. Key pin
7. Brake pedal
8. Slotted pin
9. Bolt
10. Plain washer
11. Spring washer
12. Nut
13. Return spring
14. Fork connection (Push rod)
15. Welded bolt
16. Fork connection
17. Master cylinder

Removal and installation of transmission unit

Removal of transmission unit

If the transmission unit is to be removed from the car, the entire unit must be lifted out.

1. Disconnect the battery earth cable at the engine and battery.
2. Disconnect the headlight- and direction- indicator flasher cables. Mark out or make a note of the location of the cables, this facilitates their refitting.
3. Remove the hood. To do this, first open the hood wide and then loosen its two retaining bolts. An assistant holding the hood on the other side, helps to lift it off.
4. Drain the coolant.
5. Loosen the upper and lower coolant hoses from the engine, and also the hose to the expansion tank.
6. Loosen the upper and lower retaining bolts of the radiator, and remove the radiator.
7. Disconnect the distributor primary cable. the ignition coil cable. and the ventilation hose from the distributor cover, and besides the fan thermostat cables.
8. Disconnect the generator- and starter cables, and the battery cable clamp at the transmission unit.
9. Remove the air cleaner, and fit protective covers on the carburetors.
10. Disconnect the fuel hose from the pump, and the three return hoses from the carburetor.
11. Disconnect the cold start control, and the throttle linkage rubber bellows from the carburetor, Pull the control shaft out of its bearing.
12. Disconnect the two heat-exchanger hoses and the temperature transmitter from the engine block.
13. Detach the engine side stay.
14. Disconnect the oil pressure monitor line and the hose from the oil pump. Bend the hose upwards and tie it in this position to prevent the oil from escaping. Cover the connections to prevent foreign matter from entering the oil pump or hose. Loosen the four retaining bolts of the oil tank. Remove the tank.
15. Remove the generator.
16. Remove the protective plate above the exhaust manifold.
17. Back off the two muffler flange bolts on the exhaust manifold, and remove the exhaust pipe clamp.
18. Back off the muffler retaining nut, and tie the muffler in order to avoid distortion of the exhaust pipe.
19. Detach the front engine supports from the body. The six bolts are accessible from under the engine compartment floor.
20. Detach the freewheel control from the transmission unit.

21. Disconnect the clutch cable from the power unit by slackening the cable and detaching the wire at the attachment beneath the engine.
22. Remove the gear-shift shaft joint from the transmission unit by means of the nut which is transferred from the lower end of the conical pin to the threaded, upper end.
23. Disconnect the speedometer cable from the transmission unit.
24. Remove the right-hand pedal sheet after turning back the floor mat. Remove the rear engine bracket screw by means of an 9/16 in. socket wrench.

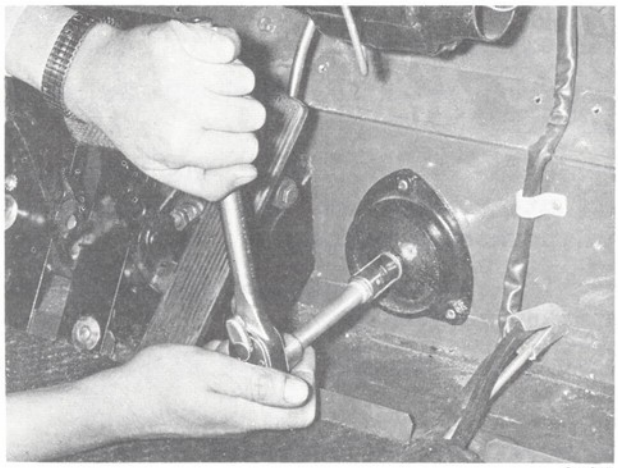

S 1367

Removing the rear engine bracket

25. If the engine bracket is jammed, tap it off with an arbor. See fig.

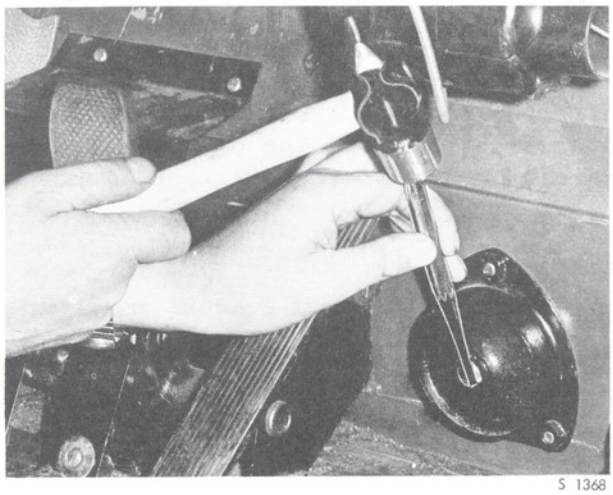

S 1368

Tapping off the bracket with an arbor

26. Attach the lifting hook 784058, and move the power unit slightly to the right, so that the left drive shaft comes out of the joint. Detach the right-hand drive shaft in the corresponding way, then fit protective cover 783846 in the rubber boots and on the inner drivers as well. Lift the power unit out of the car.

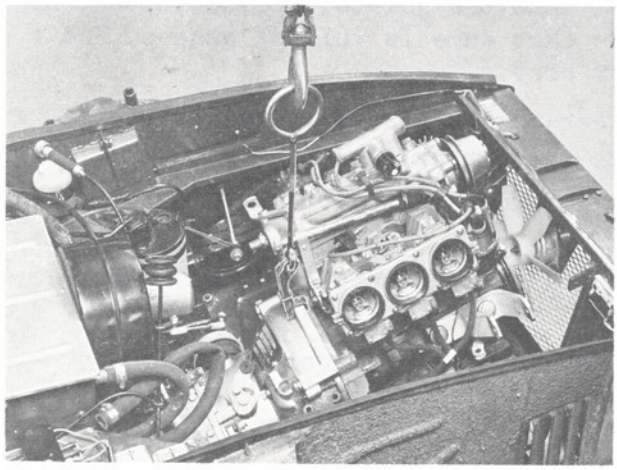

Lifting out the power unit

27. Clean the power unit, and separate the engine from the transmission unit

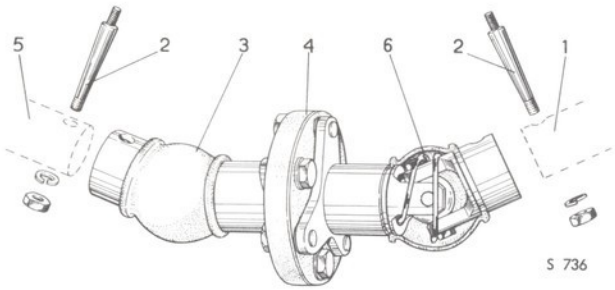

Gear-shift shaft joint
1. Gear-shift shaft
2. Conical pin with locking nut
3. Rubber boot
4. Rubber plate
5. Control shaft, transmission unit
6. Spring

Installation of transmission unit

1. After reassembling the engine, transmission and starter, lift the entire power unit into the car, using lifting hook 784058
2. While lifting in the power unit, guide the drive shaft of one side into its joint. Repeat the procedure for the other side. The fitting is made easier, if the T-shaped parts are held vertically when being guided into the joints. See to it that dirt does not enter the joint and that same is full of grease. Fit a new clamp around the rubber boot.
3. Tighten the retaining screws for the rear engine bracket, fit the pedal sheet and replace the rubber floor mat.
4. Tighten the bolts for the front engine bracket.
5. Fit the muffler, connecting it to the exhaust manifold before permanently tightening the suspension nut. Tighten the exhaust-pipe clamp.
6. Fit the protective plate above the exhaust manifold.
7. Fit the generator.
8. Connect the earth cable to the engine.
9. Fit the speedometer cable and the freewheel control to the transmission unit.
10. Connect the throttle linkage and the cold start control.
11. Mount the gear-shift shaft joint.
12. Fit the clutch cable, and adjust the clutch.
13. Fit the engine side stay.
14. Connect the temperature transmitter and the water hoses to the heat exchanger.
15. Connect the starter- and the generator cables, and the ventilation cables and -hose to the carburetor. Connect the battery-cable clamp to the transmission unit.
16. Connect the fuel hose to the pump, and the return hoses to the carburetor.
17. Fit the air filter.
18. Install the oil tank, and reconnect the oil pressure monitor line and the hose from the oil tank as well. Then remove the plug located in the middle of the oil pump's upper part. Rotate the pump shaft approx. 100 turns by hand, using a screwdriver or tool 784128. See chapter 2!
19. Install the radiator and tighten the retaining bolts.
20. Reconnect the upper and lower radiator hoses.
21. Connect the headlight- and direction-indicator flasher cables.
22. Fill coolant, check the gear box oil.
23. Connect the battery earth cable, fit the hood.
24. Test-run the car on road.

Gear box

Sonett II is equipped with the same 4-speed gear box as Monte Carlo 850.
See Service Manual Saab 95, 96 and Monte Carlo 850.

Contents

x) See Service Manual for Saab 95, 96 and Monte Carlo 850.

Brakes

General

The Saab Sonett II is equipped with a brake system of the two-circuit type with disc brakes at the front and drum brakes at rear, like other Saab models.

The brake pedal frame and the brake fluid container are, however, different.

Besides, see Service Manual Saab 95, 96 and Monte Carlo 850.

Regarding fig. of brake system, see page 524-1.

Master cylinder

General

The Saab Sonett II has, in principle, the same master cylinder as other Saab cars. It is only that the brake fluid container is not integral with the master cylinder but is located on the left-hand wheelhouse in the engine compartment. The container, made of plastic, communicates with the master cylinder by means of a rubber hose. Check that the air vents in the container's cover are not choked.

Besides, see Service Manual for Saab 95, 96 and Monte Carlo 850.

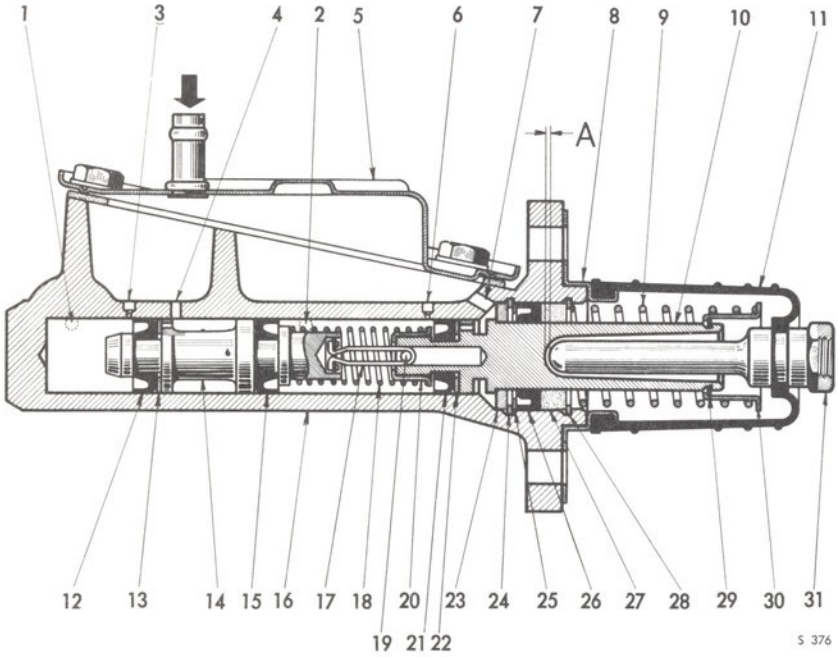

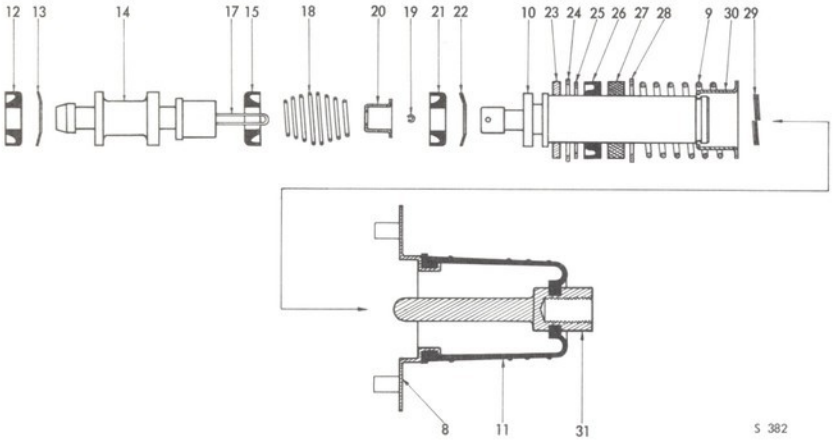

Master cylinder

1. Outlet to one circuit
2. Outlet to other circuit
3. By-pass port
4. Feed hole
5. Lid
6. By-pass port
7. Feed hole
8. Retaining plate
9. Spring
10. Primary piston
11. Rubber boot
12. Primary cup
13. Piston washer
14. Secondary piston
15. Secondary cup
16. Body housing
17. Clip
18. Spring
19. Retaining pin
20. Spring holder
21. Primary cup
22. Piston washer
23. Piston stop ring
24. Circlip
25. Washer
26. Secondary cup
27. Guide bearing
28. Circlip
29. "Spirolox" circlip
30. Spring retainer
31. Push-rod

A = 0,023-0,047 in. (0,6-1,2 mm)

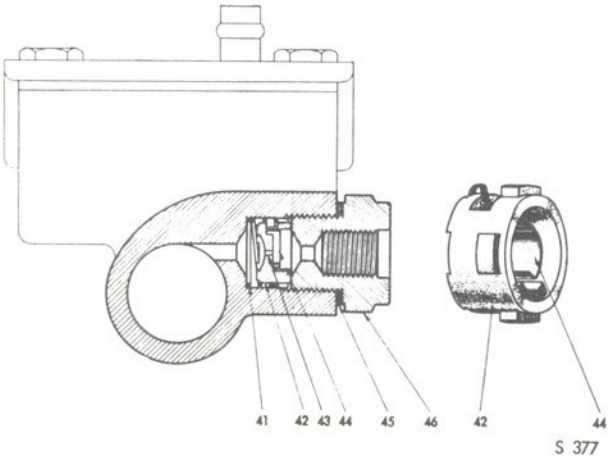

Non-return valve in master cylinder

41. Return valve spring
42. Valve body
43. Equalizing hole
44. Outlet valve spring
45. Gasket
46. Adapter

Brake operation

Brake pedal

The brake pedal and the clutch pedal are carried, below the pedal sheet,on a common shaft,which in turn rests upon two plate brackets bolted to the dash panel and the floor. The master cylinder is fastened to the dash panel.

The brake pedal movement is transmitted to the main cylinder by a push-rod, which is connected with the pedal by an articulated, lengthadjustable link.
See section 412.

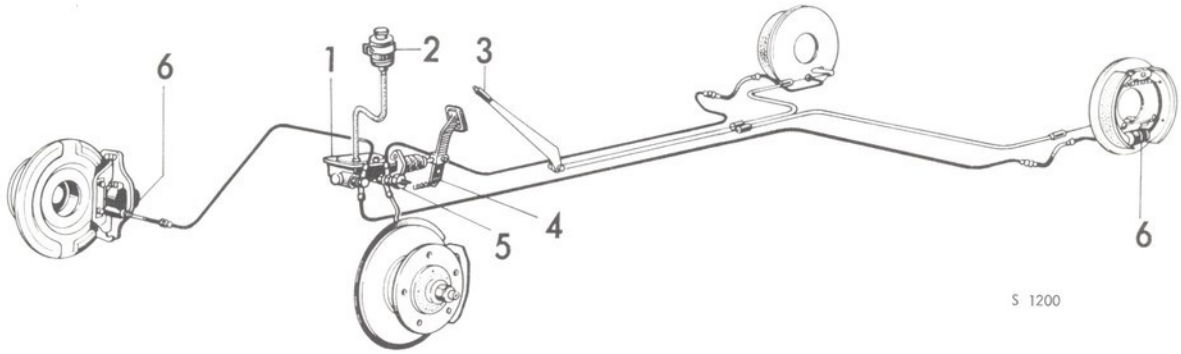

Brake system

1. Master cylinder
2. Brake fluid container
3. Handbrake lever
4. Brake pedal
5. Stop light switch
6. Brake sylinders

Contents

x) See Service Manual for Saab 95, 96 and Monte Carlo 850.

Description

The front assembly, steering column and shift gear are identical with those of the other Saab models. Sonett II has, however, no gear lever lock. Besides, see Service Manual for Saab 95, 96 and Monte Carlo 850.

Front wheel alignment

The front wheel angles for Sonett II can be seen from the following table. Besides, see the Service Manual for Saab 95, 96 and Monte Carlo 850.

Toe-in	0.04 ± 0.04 in. (1 ± 1 mm)
Camber	0 ± 1/4°
"King pin" inclination	7 ± 1°
Caster	2 ± 1/2°
Wheel turning angles:	
outer wheel	20°
inner wheel	22 1/2 ± 1 1/2°

Rear wheel alignment

See Service Manual for Saab 95, 96 and Monte Carlo 850.

Steering wheel and column shift gear

General

The Sonett II is equipped with a leather-covered, so-called sports wheel. The car has column shift gear, the gear shift rod of which is connected with the gear box control shaft by an articulated ball joint. This link consists of a short shaft, which by means of universal joints is connected to the gear shift rod and control shaft respectively, see fig.

Steering wheel: horn button assy.

Disassembly

1. Disconnect horn wire at connector, accessible under instrument panel.
2. Remove horn button with the aid of a thin screwdriver or penknife inserted between button and steering-wheel hub. Pry gently, and button will come free - see fig.
3. Disconnect wire from contact plate.
4. Twist contact plate, to permit removal of both plate and spring.
5. Back off nut; remove locating washer and contact cup.
6. Lift away steering wheel.
7. Washer under steering wheel and return yoke for turn indicator switch can now be removed.

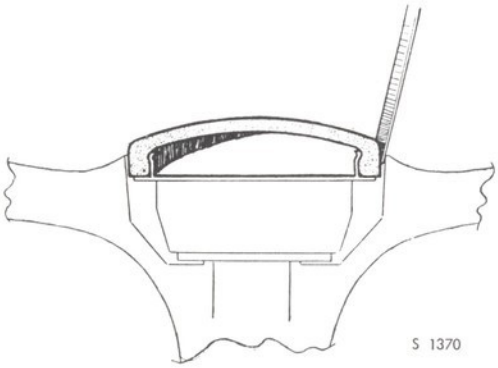

Removal of horn button

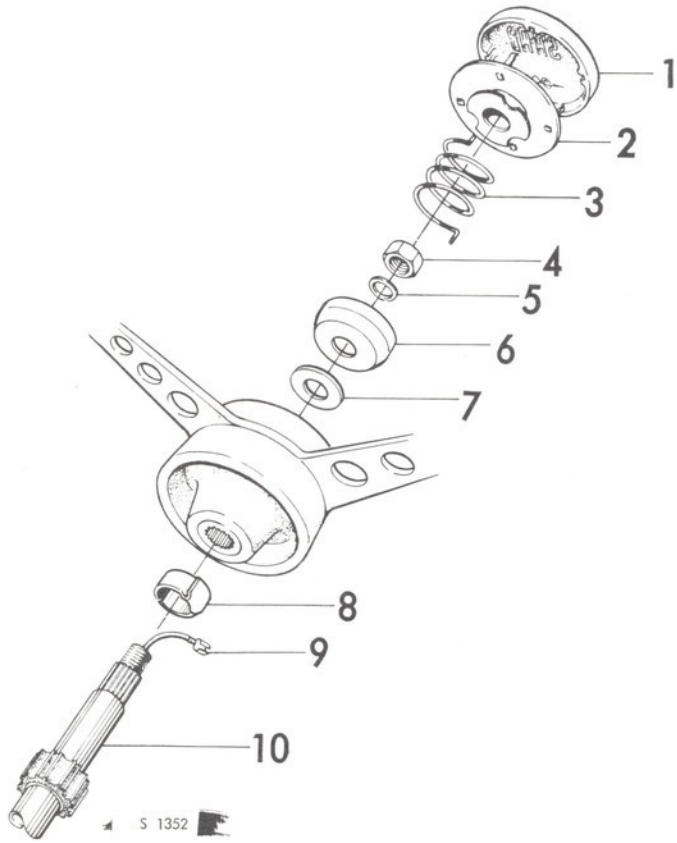

Steering wheel and horn button assembly

1. Horn button
2. Contact plate
3. Spring
4. Nut
5. Washer
6. Contact cup
7. Washer under cup
8. Return yoke
9. Horn wire
10. Steering column

> NOTE
> Fit the return yoke so that its center axis coincides with the center axis of the switch housing.

Reassembly

1. Refit return yoke and washer if these have been removed.
2. Fit steering wheel on column. Make sure that front wheels are aligned straight ahead and push steering wheel on centre pin of column so that steering-wheel spokes are aligned horizontally.
3. Fit spacer, contact cup and spring washer. Tighten nut.
4. Insert spring and contact plate, and connect horn wire to contact plate.
5. Fit horn button so that the four projections on contact plate fit into notches on bottom side of button.
6. Connect up horn wire.
7. Check clearance between return yoke and projection on turn indicator switch. Correct clearance is 0.008-0.024 in. (0.2-0.6 mm) with switch at neutral. Adjust by inserting spacers between switch and column stand.

Steering column and bearings

Disassembly

Disassembly of the column involves disassembly of the shift-gear mechanism, since this is mounted in the same stand.

1. Disassemble steering wheels and horn-button assy., as described.
2. Loosen and remove clamp screw at column connection to steering gear pinion.
3. Unscrew nut from upper end of gear-shift shaft universal joint and screw taper pin with the aid of the nut which is moved to the outer end of the pin.
4. Undo the two screws for steering-column stand. The stand and steering column, together with gear-shift shaft and lever, are now loose and can be removed from the car.
5. Draw column out of its bearing.
6. Remove the two rubber bearing bushings.

Reassembly

1. Refit rubber bushings - see fig.

> NOTE
> The upper rubber bushing is thinner than the lower rubber bushing. Furthermore, the bushings are tapered and must therefore be fitted with the arrow marked on the locating shoulder pointing towards the steering wheel.

Front assembly, steering, column shift gear 6

2. Pass column into bearing.
3. Refit assembly in car. Adjust position as described under " "Checking and Adjustment" and secure steering-column stand by tightening the two screws.
4. Fit locating spring and reconnect shift shaft to universal joint with taper pin.
5. Reconnect steering-column joint to steering-gear pinion and tighten clamp screw.
6. Refit steering wheel and horn-button assy. as described above.

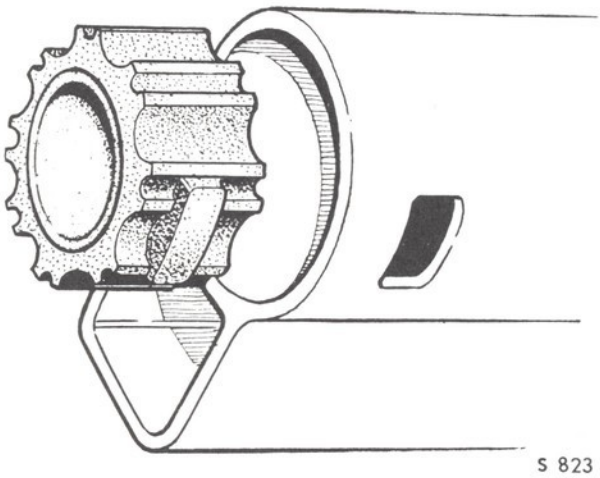

Bushings, steering-column stand

Gear-shift mechanism

Disassembly

1. Disassembly steering-column stand with column and gear-shift mechanism as described above.
2. Loosen nut below gear-shift lever housing and pull gear-shift shaft out of stand. Note the stop screw.
3. Apply a screwdriver blade to one flank of stop block in square hole in shift-lever housing, at the same time gripping lever knob and pressing lever while turning through 1/4 turn. Screw knob off lever and push lever out of housing. Stop block, spacer, spring and plastic ball will now be released.
4. Remove washers, bushing, spring and felt ring from gear-shift shaft.
5. Remove nut from gear-shift lever housing after having extracted lockring.

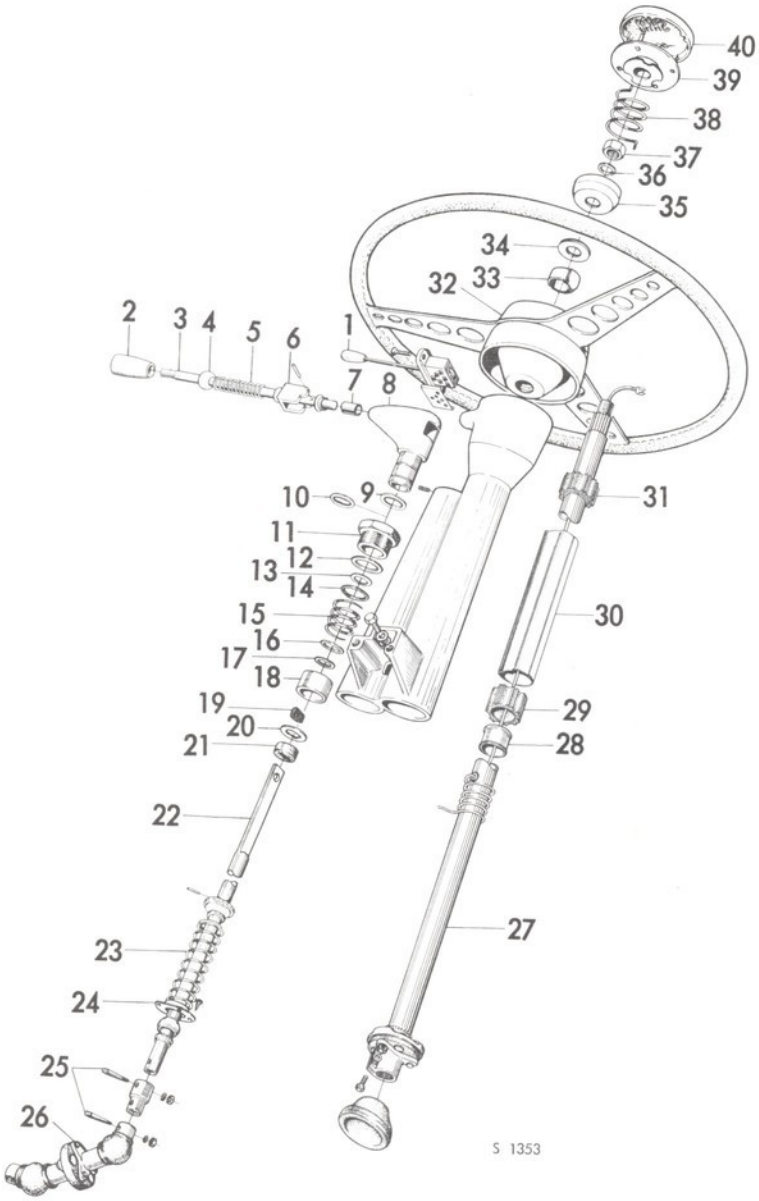

Steering column and gear shift mechanism

1. Direction indicator switch
2. Knob
3. Gear shift lever
4. Ball
5. Spring
6. Turn stop
7. Bushing
8. Lever housing
9. Washer
10. Washer
11. Nut
12. Fibre washer
13. Snap ring
14. Washer
15. Spring
16. Washer
17. Washer
18. Bushing
19. Rubber ball
20. Washer
21. Felt ring
22. Gear shift rod
23. Spring
24. Bracket
25. Tapered pins
26. Universal joint
27. Steering wheel shaft
28. Bushing
29. Bushing
30. Cardboard sleeve
31. Bushing
32. Steering wheel
33. Return yoke
34. Washer
35. Contact cup
36. Washer
37. Nut
38. Spring
39. Contact plate
40. Horn button

Reassembly

Renew all worn or damaged parts before reassembling gear-shift mechanism.

1. Refit felt ring, washers, bushing and spring on gear-shift shaft as shown in the fig.
2. Refit nut and lockring to gear-shift lever housing.
3. Put plastic ball, spring, stop block and spacer on gear-shift lever, and refit lever in housing.
4. Slide gear-shift lever housing onto shaft and pass lever through hole in shaft, taking pains to do so at correct angle, since it must pass diagonally through gear-shift shaft. Press simultaneously on stop block and outer end of gear-shift lever, twisting lever until pin through it enters its groove in spacer.
5. Replace the knob.
6. Fit the rubber ball between gear-shift shaft and gear-shift lever housing, positioning it on same side as gear-shift lever.
7. Slide gear-shift shaft into bearing and tighten nut.
8. Reassemble steering-column stand together with steering column and gear-shift mechanism. Remember to fit washer and return spring on gear-shift shaft.
9. Adjust position of steering-column stand as described under "Checking and Adjustment".

Gear-shift
Shaft universal joint

Disassembly and reassembly

The universal joints can be lubricated without being disassembled if the rubber dust excluders are turned aside.

1. Remove the nut and place it on the other end of the taper pin. Tighten the nut, thus loosening the pin.
2. Release the universal joint from the gear-shift shaft, collecting the the gear-lever return spring which is located on the gear-shift shaft.
3. Remove the fastener and drive out the other taper pin in the same way.
4. Pull the joint off the transmission operating rod. Check the joint for excessive play or stiffness. If new dust excluders are to be fitted, remove the old grease and pack the joints with SAAB Special Grease before fitting the new dust excluders.
5. Refit the universal joint to the operating rod and drive in the taper pin. Make sure that the tapers in the joint and operating rod are properly aligned.

> NOTE
> The gear-shift shaft universal joint has on a 4-speed car displaced joints. The universal joints' color-marked end should be turned against the gear box.

6. Refit the return spring to the gear-shift shaft if it has been removed. Then pass the universal joint onto the shaft and drive in the taper pin.
7. Refit the taper pin fastener.

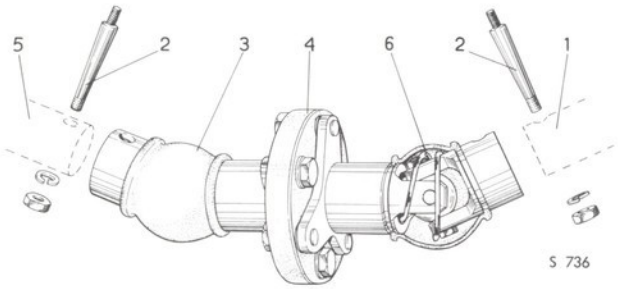

Gear-shift shaft universal joint

1. Gear shift rod
2. Conical pin with lock nut
3. Rubber boot
4. Rubber disc
5. Operating shaft, gear box
6. Spring

Adjustment of steering-column stand and gear positions

The steering-column stand is fastened with two bolts to a bracket beneath the instrument panel's shock safety-guard and one bolt on the left-hand side of the steering-column stand. Loosen the bolts when adjusting the gear positions. They are accessible, once the push safety-guard is removed. See fig.

Make sure that the steering-column stand is correctly adjusted in the vertical direction, since this entirely determines the gear-shift positions. The gear-shift lever play in the plane of the gear-shift rod axis should be checked in the following way:

Engage the top gear, and move the gear-shift rod firmly but not roughly in both axial directions. When this is done the lever knob should move 0.32-0.47 in. (8-12 mm).

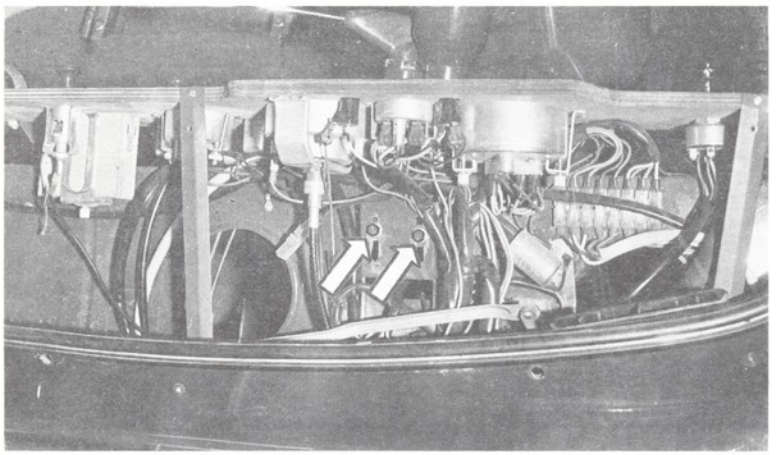

S 1371

Adjusting bolts for steering column stand

Contents

x) See Service Manual for Saab 95, 96 and Monte Carlo 850.

Description

Front suspension

Sonett II has the same suspension as that of other Saab models, the coil-springs are however different. Besides, see Service Manual Saab 95, 96 and Monte Carlo 850.

Rear Suspension

The coil-springs are specific for Sonett II. Besides, see Service Manual Saab 95, 96 and Monte Carlo 850.

Shock absorbers

Sonett II has the same shock absorbers as the Saab 96 and Monte Carlo 850. See Service Manual Saab 95, 96 and Monte Carlo 850.

Wheels and hubs

See Service Manual Saab 95, 96 and Monte Carlo 850.

Tires

Sonett II has the same tire equipment as that of Monte Carlo 850. See Service Manual Saab 95, 96 and Monte Carlo 850.

Coil-spring suspension, front

Sonett II has the same suspension as that of other Saab models, the coil-springs are however different. Besides, see Service Manual Saab 95, 96 and Monte Carlo 850.

Coil-spring suspension, rear

The rear coil-springs are specific for Sonett II. Besides, see Service Manual Saab 95, 96 and Monte Carlo 850.

Shock absorbers

Sonett II has the same shock absorbers as those of Saab 96 and Monte Carlo 850. See Service Manual Saab 95, 96 and Monte Carlo 850.

Tires

Sonett II has the same tire equipment as that of Monte Carlo 850. See Service Manual Saab 95, 96 and Monte Carlo 850.

Contents

Description

The body assembly consists of a shell, which is screwed and riveted on to a supporting frame.

The shell is made of glass-fibre reinforced plastic, and consists of only five parts. The roof section comprises, beside the roof itself, also the rear part and the rear fenders. In the windshield pillars there are reinforcements in the form of cast-in steel sections. The hood and the front fenders form one part, which can be opened forward upward. The interior of the engine compartment is therefore easy to reach. The doors consist of a steel frame, on to which the plastic shell has been riveted. The trunk lid forms the fifth part of the body.

The body frame is made of pressed steel sheets. It consists of a flat floor, side sills front and rear wheelhouses, dash panel, and a cross-member behind the seats. At the sides, rigidity for the floor is provided by strong, box-shaped sills. Between the roof and the cross-member is located a so-called roll-over bar made of steel tubing. The luggage compartment comprises the car´s rear part. Here the floor consists of a plate, below which the spare wheel and the battery are placed in a special partition.

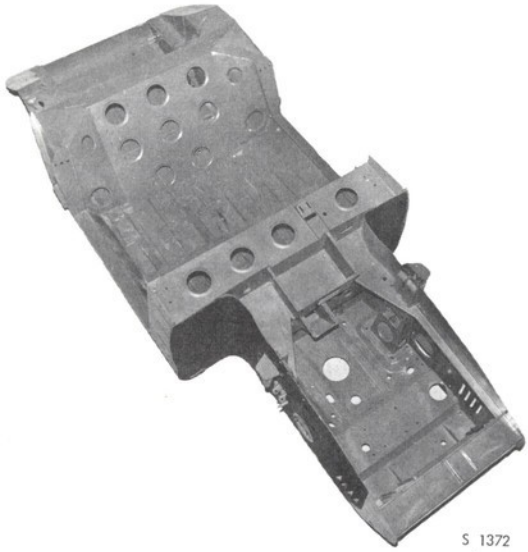

Body supporting frame

Body, its insulation and interior fitments

Inside the wheelhouses a layer of insulation compound has been sprayed. This compound affords protection against flying stones and corrosion, besides having certain sound absorbing properties.

The floor is internally insulated with so-called waffle-pattern paperboard under the front floor-mat, and covered with textile carpets both in the passenger and in the luggage compartment. The lining is pasted on the body in the roof and on wheelhouses, sills, seat beams and cross-members. The door trim, and the valances above the door and the trunk lid, and also the lateral trim in the trunk have been screwed on.

Body assembly

General

When repairing the body frame, proceed in accordance with the instructions given in the Service Manual for the Saab 95, 96 and GT 850.

The special tools recommended therein can be used also now, except for aligning tool 784077 which does not fit because of the smaller wheelbase of the Sonett II.

The body shell can be repaired either by replacement of complete parts or by mending the damaged piece, depending on the extent of the damage. As two cases of damage are never exactly alike, all that can be done here is to give some typical exemples of how to deal with body damage.
When mending local damage, the damaged piece should be ground away. Preferably, both sides should be ground as per alternative A, but if this is difficult it will suffice to grind the outside only as per alternative B. The cavity is then reinforced with fiberglass matting or fiberglass cloth, which is impregnated with plastic and moulded to the right shape. After curing, the plastic can be ground, filled with putty and enamelled. In an emergency, damage can be repaired in the manner illustrated by fig. C, in which a reinforcement consisting of fiberglass cloth and plastic has been applied to the rear side. Note that the surface to be coated must be smoothened with sandpaper.
Small holes or pores can be drilled out and then filled with plastic putty. See fig. D.
Large holes right through the body shell can be repaired by first trimming and chamfering the edges, whereupon a rubber or wooden mould to which release agent or plastic film has been applied is secured to the outside of the panel. After this, plastic and fiberglass cloth and/or fiberglass matting is applied to the inside.

Materials

Plastic:	Always use a high-quality polyester-base plastic with good permanence of form.
Putty:	The putty must be of good quality and made on a polyester base.
Fiberglass:	Ordinary commercial fiberglass matting or fiberglass cloth can be used.

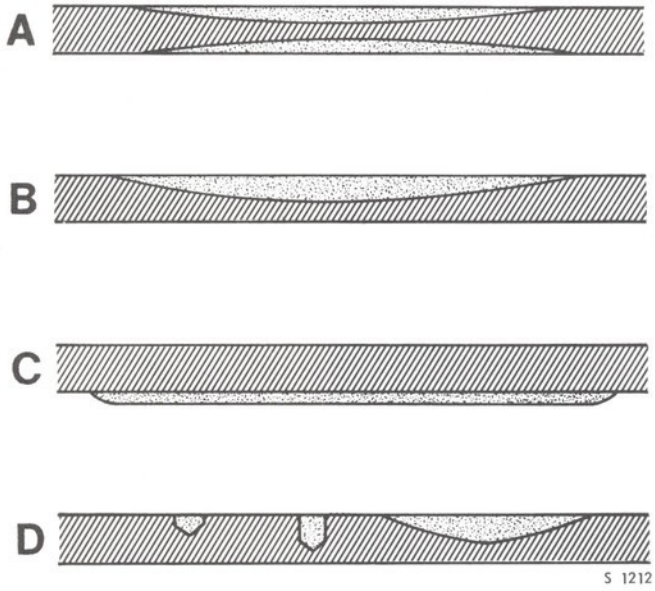

Typical examples of plastic body repairs

Removal of body

1. Detach the positive cable connection from the battery.
2. Detach the cables for the rear lighting. These are accessible under the lining above the trunk lid.
3. Loosen the windshield wiper spindle nuts.
4. Remove the weatherstrips from around the doors.
5. Loosen the crash panel upholstery screws on the instrument panel, then remove the panel upholstery.
6. Loosen the body retaining bolts located in front of the windshield.
7. By boring, remove the pop rivets on the front and rear door pillars. See fig.

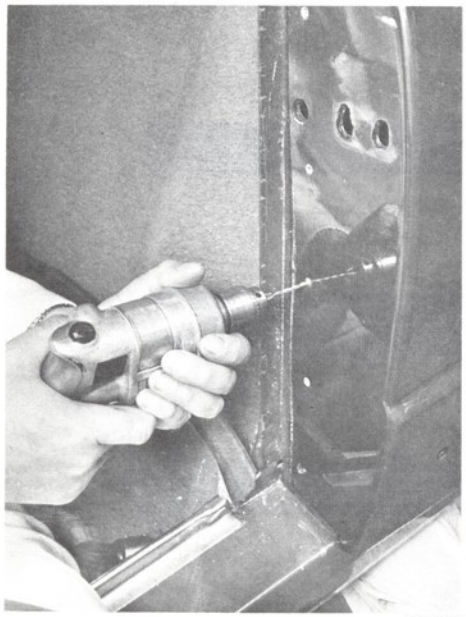

S 1373

Removing the pop rivets by boring

8. Loosen the body retaining bolts by the front door-pillar. These are accessible after removal of the side lining under the instrument panel. See fig.

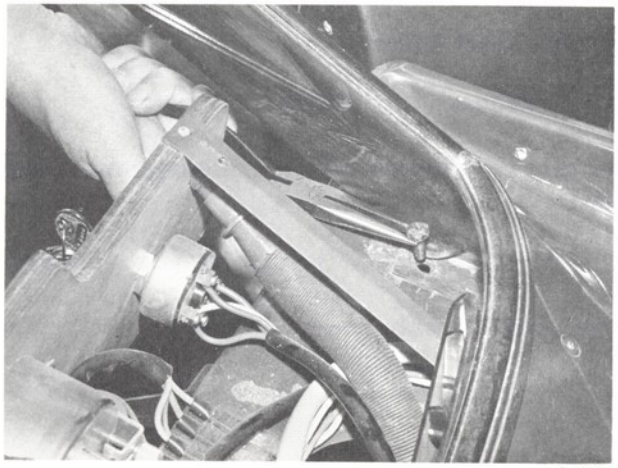

S 1374

Removing the body retaining bolts

9. Remove the door lock striker plates.

10. Loosen the roll-over bar retaining bolts from the roof and at the bottom of the body side.

11. Loosen the retaining bolts in the wheelhouse under the rear fender.

12. Remove the draining tubes in the front part of the body, after working them loose with a chisel. See fig.

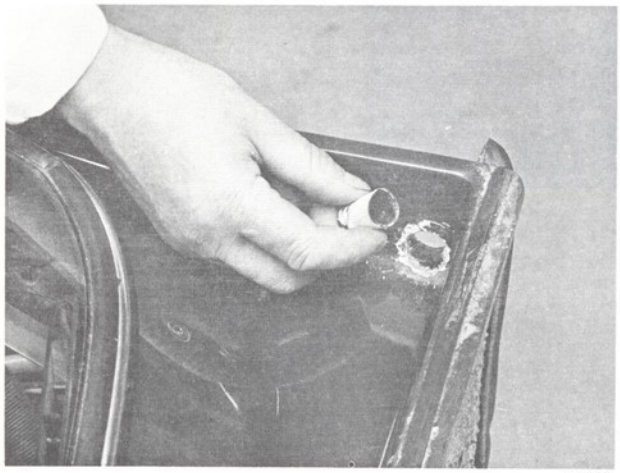

S 1375

Removing the draining tubes

13. Remove the rear muffler.

14. Lift the body off, straight upwards. See fig.

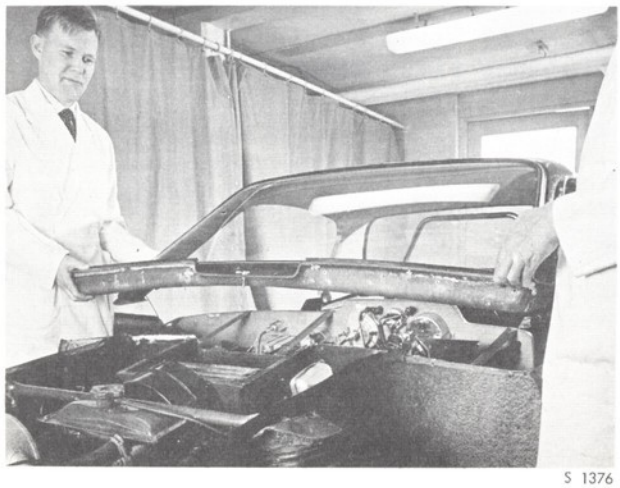

S 1376

Lifting off the body

S 1377

Lifting off the body

Mounting of body

1. Place the body on the chassis.

2. Secure the body with the retaining bolts in the wheelhouses under the rear fenders, and by the door pillar under the windshield. Do not tighten the bolts for good.

3. Make sure that the chassis is correctly positioned in every respect. Tighten the bolts for good.

4. Fit and tighten the roll-over bar bolts.

5. Drill holes for pop rivets (a kind of blind rivets), then fasten the rivets with a pair of special pop rivet tongs. See fig.

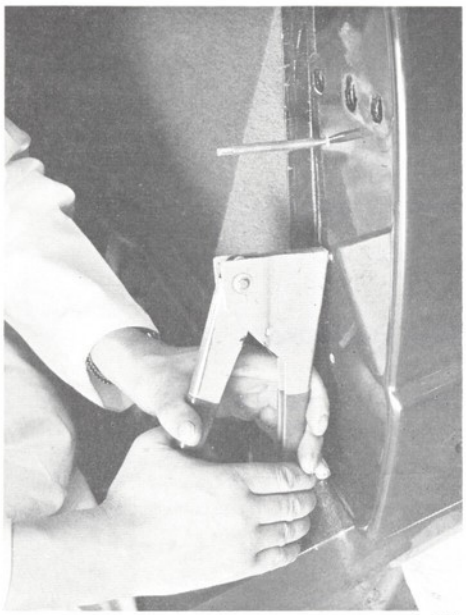

S 1378

Pop riveting with a special tool

6. Fit new weatherstrips by the doors.

7. Fit the striker plates of the door locks, adjust the striker plates to the doors.

8. Fit the retaining bolts at the front end of the body.

9. With plastic on both the in- and outside, fasten draining tubes to the front part of the body. See fig.

S 1375

Fastening the draining tubes

10. Fit windshield wiper spindles.

11. Fit electric cables for the rear lighting.

12. Fit the lining

13. Fit the panel upholstery to the instrument panel.

14. Install the battery and its positive cable

Hood

Removal of hood

1. a) Pull off the handles (made of rubber) from the hood.
   b) Lift up the hood by gripping it below a windshield wiper.

2. Detach the cables for the headlights and the direction indicator repeater lights. Before removal of the cables, mark out their location.

3. Take the hood away by removing the bolts which serve as hood hinges.

To fit the hood, proceed in the corresponding way.

Hood lock

The hood is locked with a rubber strap-device, located on the fender side. See fig.

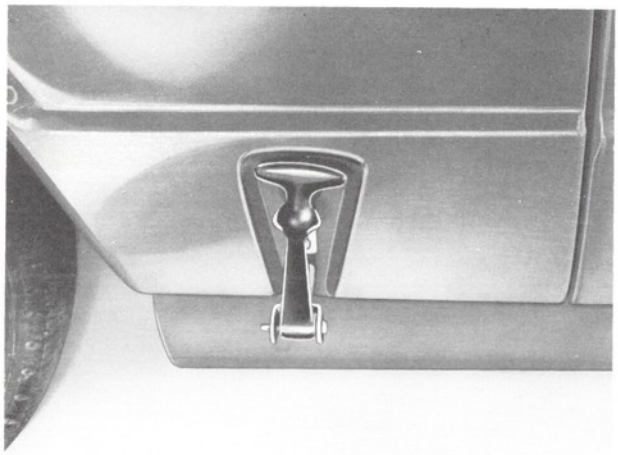

S 1175

Hood lock

Adjustment of hood

1. Remove the grill.

2. Loosen the hinge attachment locking nuts on the inside of the wheelhouses. Adjust the hood to fit with body and doors.

3. Tighten the locking nuts.

4. Fit the grill.

5. Adjust the guide lug locking plates in the body to the effect that they fit with the new position of the hood.

Grill

The grill is attached to the front edge of the wheelhouse by means of self-tapping screws accessible from outside.

Doors

Removal of door

1. Open the hood.

2. Release the door stop by driving out the pin.

3. Detach the door hinge retaining bolts in the body, and remove the door.

Installation and adjustment

1. Install the door with the hinges fitted, do not tighten the retaining bolts for good.

2. Close the door, and adjust it in vertical as well as in longitudinal direction.

3. Tighten the retaining bolts for good.

4. Fit the door stop. For adjustment out or in, suitable inserts may be placed under the hinges.

Replacement of door lock

1. Remove the interior door trim

2. Back off and remove the four dock-lock retaining screws on the back of the door. The two lower ones are accessible after removal of the rubber plugs, see fig. Release and remove the lock.

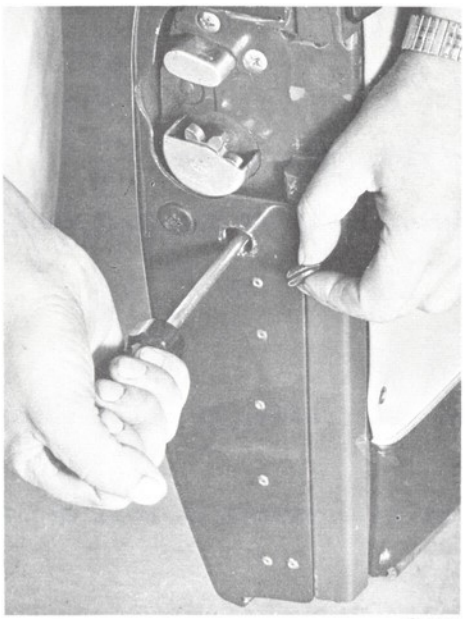

S 1379

Removing the door rubber plug

Fitting of the door lock is made in the reverse order.

Before refitting, check that the moving parts and the lock springs are well lubricated with SAAB Special Chassis Grease. Check that a clearance of 0.004-0.02 in. (0.1-0.5 mm) is maintained when the button in the outside door handle is depressed. The clearance may be adjusted by filing lightly the arm located on the handle button.

Adjustment of door striker plate.

After the fitting, adjust the striker plate to make the door open and close easily.

Make sure, too, that the teeth mesh satisfactorily in all positions.

Replacement of door handle

To make it possible to remove the door handle, it is necessary to loosen the plastic cover on the door by drilling away the pop rivets on the back and on the underside of the door. Leave the rivets on the front side alone. See fig.

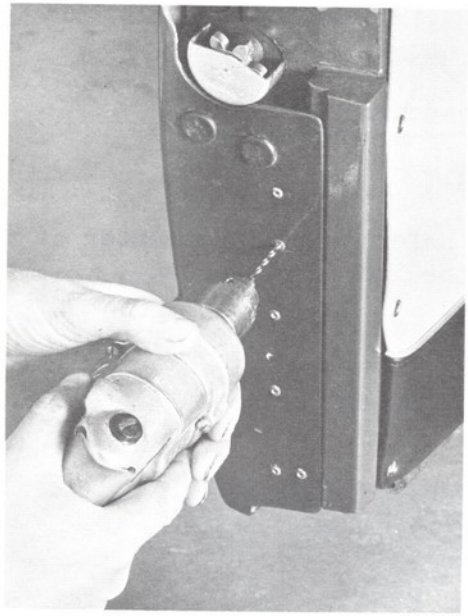

S 1380

Removing the pop rivets

Then it is possible to fold out the plastic cover and place a key on the inside. See fig.

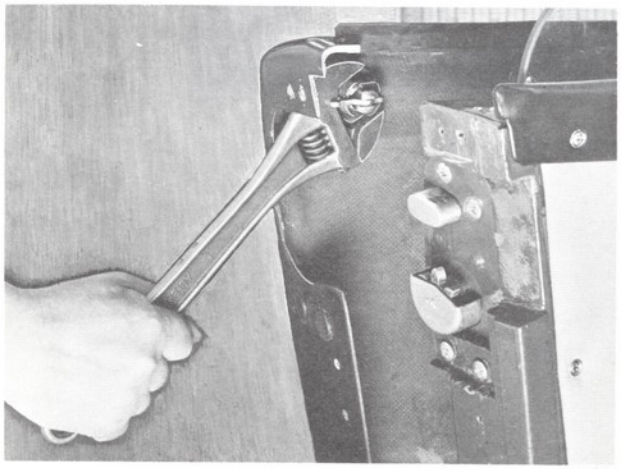

S 1381

Removing the door handle

Loosen the nut and the slotted screw which retain the handle. Remove the handle. Replacement is made in the corresponding way.

Replacement of door lock cylinder

See Service Manual for the Saab 95, 96 and Monte Carlo 850.

Removal and replacement of luggage-compartment lid

1. Loosen the two screws. See fig.
2. Move the screws in the oblong hole towards the center of the lid, thereby releasing the pin of the lid from the body.
3. Remove the lid.

Replacement is made in the corresponding way.

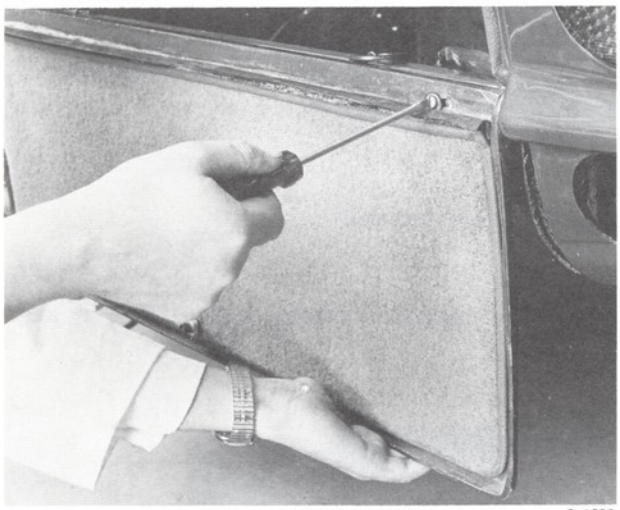

S 1382

Removing the lid

Glass

In the Sonett II, the windshield is of laminated glass and the other windows of toughened glass.

When replacing front and rear glass windows, proceed in the same way as for other Saab models.

See Service Manual for the Saab 95, 96 and Monte Carlo 850.

Replacement of door windows

The bottom of the opening door window glass is pressed into a retainer channel which is secured to the window-regulator winder device. Run channels guide the front and rear edges of the glass.

Removal

1. Remove the interior door trim.

2. Remove the front, fixed window by cautiously prying loose the lower, pasted border and then lifting the window forwards - upwards. See fig.

S 1383

Removing the front, fixed door window

3. Remove the opening window by loosening the window from the retainer channel.

4. Loosen the nut for the lower attachment of the front run-channel.

5. Press the upper end of the run channel forwards, and lift out the window.

Replacement

1. Lift the opening window into position, and leave it loose-fitting in its holder.

2. Tighten the nut on the lower end of the front run-channel.

3. Secure, by pressing, the window in its holder. See fig. If necessary, place a dolly under the channel, and tap the window down gently.

S 1384

Pressing the window in its holder

4. Check that the window moves easily in the run channels. Adjustment, if needed, can be made by slackening the screws of the rear attachment of the window-regulator winder device.

5. Fit the front window. Do not forget to paste the lower border.

Instrument panel

The Sonett II is equipped with a wooden instrument panel, the top cover of walnut. Above the instrument panel there is a crash safe-guard of thin aluminium sheet with plastic padding.

Removal and refitting

1. Detach the screws on the upper side of the crash panel upholstery. Remove the panel upholstery.

2. Disconnect cable terminals, speedometer wire and defroster hoses.

3. Loosen the screws in the upper attachment irons.

4. Loosen the retaining screws in the dash-panel. Lift off the instrument panel.

Seats

The seats are made of fibre glass plastic, and covered with plastic coated fabric. The seats are adjustable for legroom, and are secured in the desired position by means of a readily accessible, spring-loaded latch. See also the Service Manual for the Saab 95, 96 and Monte Carlo 850.

Contents

Instruments, controls

1. Tachometer. The green zone shows the permissible number of revolutions. The tachometer is electric.
2. Fuel gauge. The amount of fuel in the tank is shown when the ignition is switched on.
3. Temperature gauge.
4. Speedometer with odometer and trip-meter. The speedometer is graduated in m.p.h. or km/h. The odometer shows the distance covered in miles (kilometers).
5. Electric clock with setting screw. The regulating screw is at the back of the clock.
6. Defroster vents.
7. Ignition lock.
8. Charge indicator light. Glows orange when the alternator is not charging.

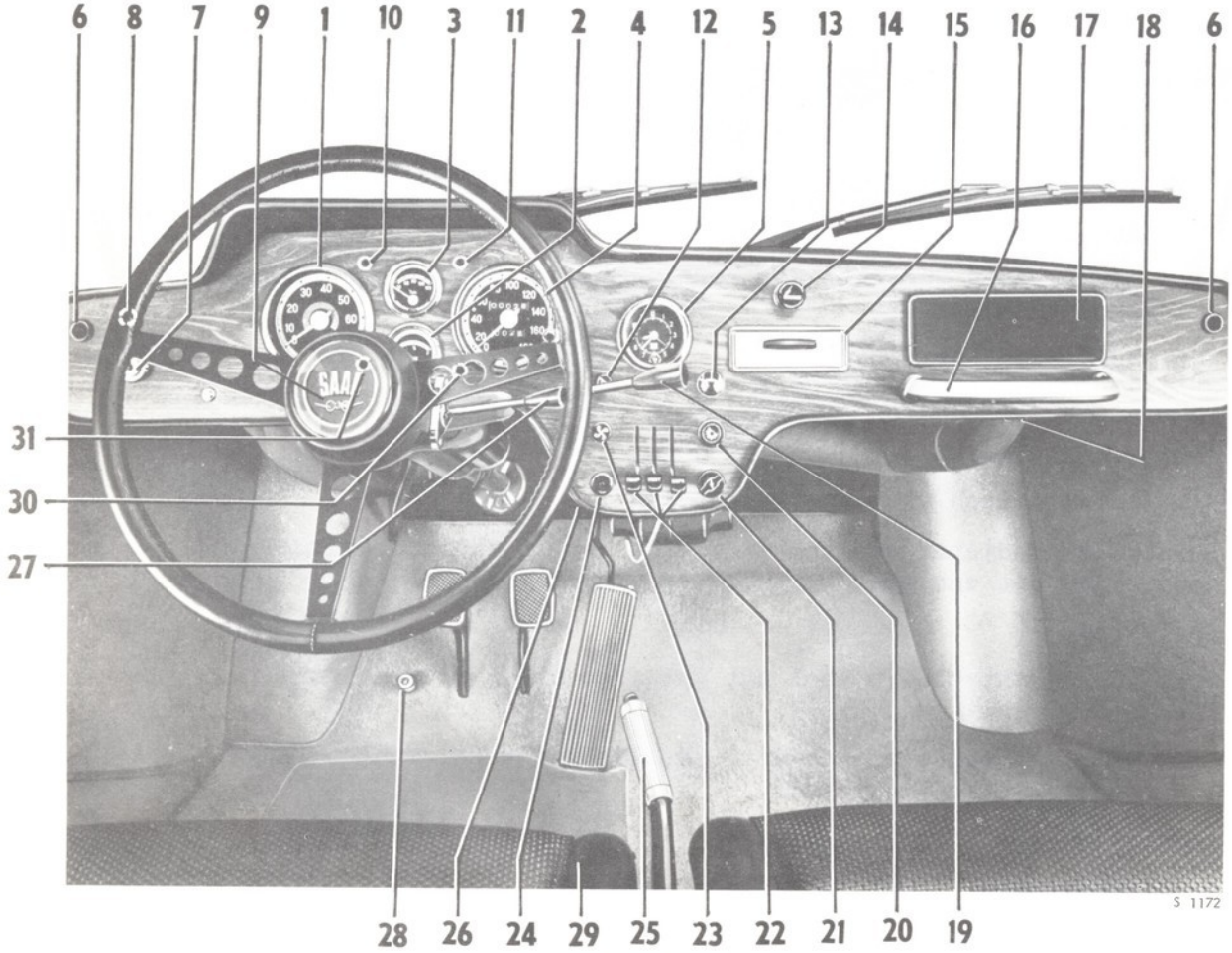

Controls and instruments

9. Horn button.

10. Oil-pressure indicator light. As the oil warning relay has a delayed action, the light may be glowing red up to 1 - 1 1/2 minute after starting without there being any fault in the lubrication system.

11. Direction indicator repeating light. Flashes green in time with the indicators.

12. Switch for windshield wipers, 2 speeds, and windshield washer. To start the wipers, pull out the knob. The first position is for low speed, and the second position for high speed. The windshield washer works when the knob is pulled fully out.

13. Switch for headlights and instrument panel lights. When the knob is pulled out to the first stop, the side and rear lights as well as the number plate light are lighted. Pulling the knob all the way out lights the headlights also. When the knob is pulled in either position, the intensity of the instrument panel lights may be adjusted by turning the knob.

14. Cigarette lighter.

15. Ashtray.

16. Grab bar.

17. Detachable plate for radio installation.

18. Map reading light.

19. Gear lever. When engaging the reverse gear, the back-up lights are automatically lit.

20. Warning flasher switch.

21. Choke.

22. Heater controls.

23. Heater fan switch with two speeds.

24. Switch for radiator cooling fan. (The fan is thermostatically controlled but can also be operated manually.)

25. Handbrake.

26. Free wheel control. To lock out the free wheel action, pull the handle right out.

27. Direction indicator switch with headlight flasher when moving the lever towards the wheel.

28. Dimmer switch.

29. Seat adjustment.

30. High beam indicator light. Shows a blue light when the headlights are on with the beam undimmed.

31. Fuel indicator light. Glows red when there is less than 2 US gals. (7 lit.) left.

Instruments

The instrument equipment of the Sonett II is identical with that of Monte Carlo 850, it is only that they are arranged in a slightly different order in the instrument panel.

Speedometer and odometer

Removal and refitting

1. Remove the panel upholstery.

2. Disconnect the cables to the earth terminal, withdraw the lampholders together with their connection wires, and disconnect the speedometer drive cable.

3. Remove the instrument from the panel.

4. Install in the reverse order. Make sure that the instrument is correctly aligned.

May-be repairs and adjustment of the instrument should always be entrusted to a specialist firm.

Speedometer drive cable

When handling the speedometer drive cable, never coil it in rings with a diameter of less than about 12 inches (300 mm). Otherwise, there is a risk of damaging the flexible inner wire, which might lead to unwanted noise after installing.

When fitting the speedometer drive cable, note the following points:

1. Release the dash-panel trim at the hole where the cable enters through the dash panel.
2. Secure the upper nut to the speedometer drive cable with adhesive tape and then pass the cable up from the engine compartment and through the hole in the dash panel.
3. When fitting the cable, take care to arrange it smoothly, without any sharp bends.

Fuel and temperature gages, clock

General

These instruments are independent units and can be removed separately from the instrument panel by disconnecting the wires and removing the retaining clips.

> Repairs and adjustments of any of these instruments should always be entrusted to a specialist firm.

Radio installation

The most convenient site in which to install the radio receiver is in the space provided in the instrument panel. First, however, the lid in the panel is to be removed.

Location of antenna

It is appropriate to locate the antenna on the left fender in order to come as far away as possible from the ignition coil, or on the rear part of the car.

When fitting a radio and antenna, the supplier's instructions should be followed.

Electrical accessories

General

The radio and any other electrical accessories, such as extra lights, etc., must be properly fused off and should therefore be connected to the ignition switch or to the fuse block on the dash panel, which is provided with spare fuses for this purpose.

The wiring for electrical accessories should be so dimensioned as to ensure the least possible voltage drop. As a general rule, the following applies:

Current consumption less than 8 A (96 W): use a wire with a sectional area of 0.002 sq.in. (1.5 sq.mm).

Current consumption more than 8 A (96 W): use a wire with a sectional area of 0.003 sq.in. (2.5 sq.mm).

For all connections and splices made when installing electrical accessories, use AMP crimped terminals. See further details in chapter 3.

Fresh-air heater

General

The fresh-air heater comprises a separate system, but is connected to the cooling system. Through the air intake in front of the windshield, air enters a "collection box". The air then passes the heater core and the fan, and then flows into the passenger compartment. The air is warmed up when passing the core, which is heated by the cooling water. The temperature of the core can be varied with the thermostat-controlled stopcock. The thermostat bulb is located in the current of air injected into the passenger compartment. The amount of air admitted and its distribution can be regulated with dampers via controls. The air current can be directed towards the floor or through the defroster jets, or both ways at the same time.

The heater core is equipped with a bleed nipple, with which the core is to be bled whenever the cooling system is refilled.

Removal and installation of fan motor

1. Disconnect the cables from the fan motor, noting their respective locations.

2. Back off and remove the self-tapping screws retaining the front cover of the fan housing.

3. Pull out the cover together with the motor.

4. Remove the nuts holding the motor to the front cover. Reinstall in reverse order.

Removal and installation of fresh-air heater thermostat valve

The stop cock with its thermostat valve is located inside the passenger compartment on the R.H. side of the dash-panel, and secured to same with self-tapping screws.

1. Disconnect and remove the water hoses.

2. Back off and remove the retaining screws, remove the thermostat valve. Reinstall in reverse order.

Removal and installation of the fresh-air heater core

1. Drain off the coolant, and disconnect the hoses from the heater core.

2. Remove the plate located above the heater core.

3. Remove the bleed nipple.

4. Loosen the screws retaining the heater core. Lift out the heater core. Reinstall the heater core in reverse order.